Utek

indoor air quality and energy saving

TECHNICAL DATA

FAI-ED H/V

VENTILATION UNIT WITH HEAT RECOVERY FOR COMMERCIAL AND INDUSTRIAL BUILDINGS

FAI-ED
Is a Non Residential Ventilation Unit (NRVU)

EQUIPPED

Equipped with medium efficiency counterflow heat exchanger (Eurovent certified) and centrifugal forward blades multi speed fans.

STRUCTURE

The FAI-ED is made of extruded aluminium profiles and double skin Aluzinc® panels, sandwiched on injected polyurethane foam insulation, thickness 25 mm and density 42 Kg/m³. The position of the ducting connections, made with circular spigots, are easily configurable simply by moving the ducting connection panels. Five sizes are available in horizontal configuration, ceiling installation (only for size 1 and 2) and floor installation, or vertical configuration (floor installation), all equipped with automatic total bypass and medium efficiency heat exchanger. Post heating devices (electric or water) and electrical pre heater device are integrated into the unit, post cooling/heating water coil and direct expansion coil, are available as additional external module. The filtering sections are: ePM1 70% (F7) filters for the fresh air flow and ePM10 50% (M5) filters for the extraction air flow.

CONTROLS

The FAI-ED is supplied with control system and easy connection to the power supply. It's also available the versions with simplified CTR08-PH control, the version with EVO-PH control and the version with EVOD-PH-IP control ready for integration in home automation systems (Modbus protocol with Ethernet connection or, upon request , with the addition of the RS485 connection). The new version of our control systems allows the user to shift from one control system to another very quickly and easily by replacing the remote panel even after the installation. The CTR08-PH control allows the user to select three levels of fan speed or the possibility to stop them. It automatically manages the By-pass and prevents the heat exchanger freezing by programming the fan speed or, if specifically required, the electric pre-heater resistance (optional item to install inside the unit).The control advises the user if filters needs to be replaced (the filter clogging is monitred by a pair of differential pressure sensors) or any other fault.

The EVO-PH control has a colored backlit touch screen interface, it gives an intuitive operating status of the unit and it allows programming the fan speed. This control has a weekly time schedule for automatic unit control, it can be controlled by an external switch to activate the booster and it can automatically adjust the air flow when connected to an air quality sensor. It supports post-air treatment accessories and it advises the user if filters needs to be replaced (the filter clogging is monitored by a pair of differential pressure sensors) or if there is any other fault showing where it comes from.

The EVOD-PH-IP control has the same characteristics of the EVO-PH version with the addition of the Modbus communication protocol and it allows full control of the unit by the Home Automation software system. If the unit is in a Home Automation network, the webserver lets the user interact with it throughout a device connected to an Internet browser.

On request it's also available the version without control system and without electrical cabinet (adjustable pressure switches for filter status and bypass actuator are installed)

ACCESSORIES

FAI-ED can be equipped with other accessories such as:
. R.H. of probe, CO_2 or CO_2 / VOC
. protection roof for outside instalalzione
. switch speed

For a more complete view of the characteristics of the control panels, please read the specific manuals.

FAI-ED H (horizontal) - TOP VIEW

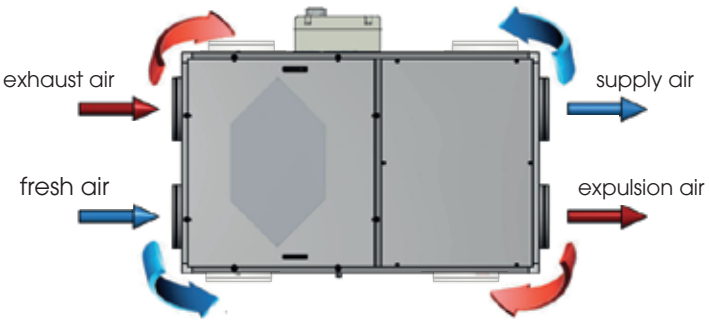

FAI-ED V (vertical) - SIDE VIEW

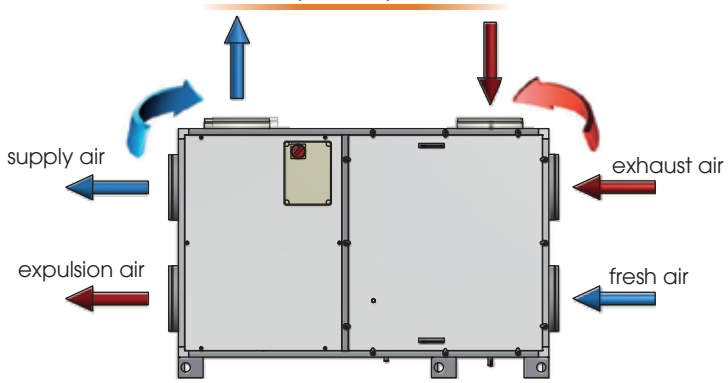

Counterflow heat exchanger made of aluminum manufactured by RECUTECH
RECUTECH participates in the Eurovent Certification Program

PERFORMANCE (UNI EN 13141-7)

The unit must be ducted properly: UTEK authorizes the use only according to its performance diagram shown into this catalogue
The declared performances are with CLEAN filters, and guaranteed ONLY with the original filters UTEK low pressure drop.

FAI-ED 1

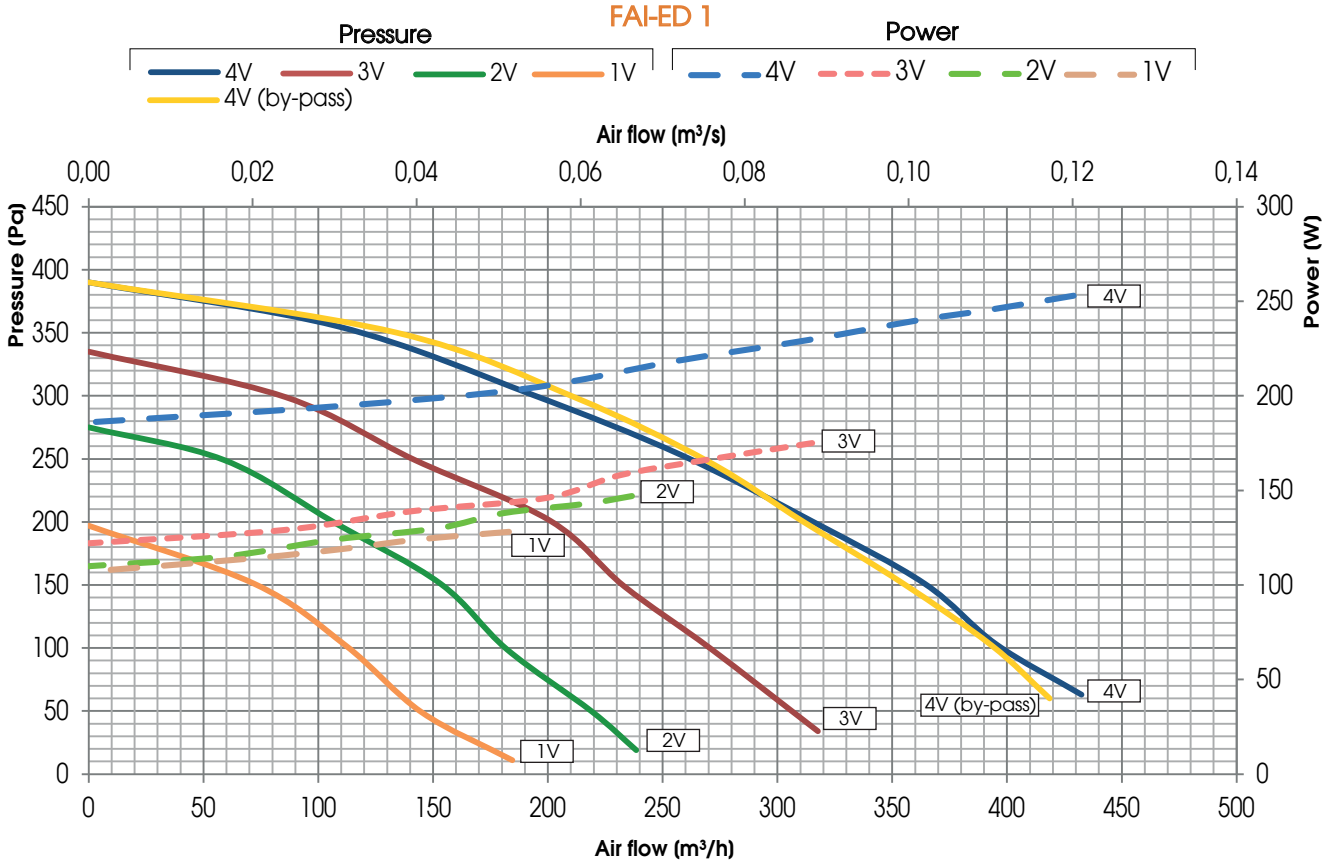

FAI-ED 2

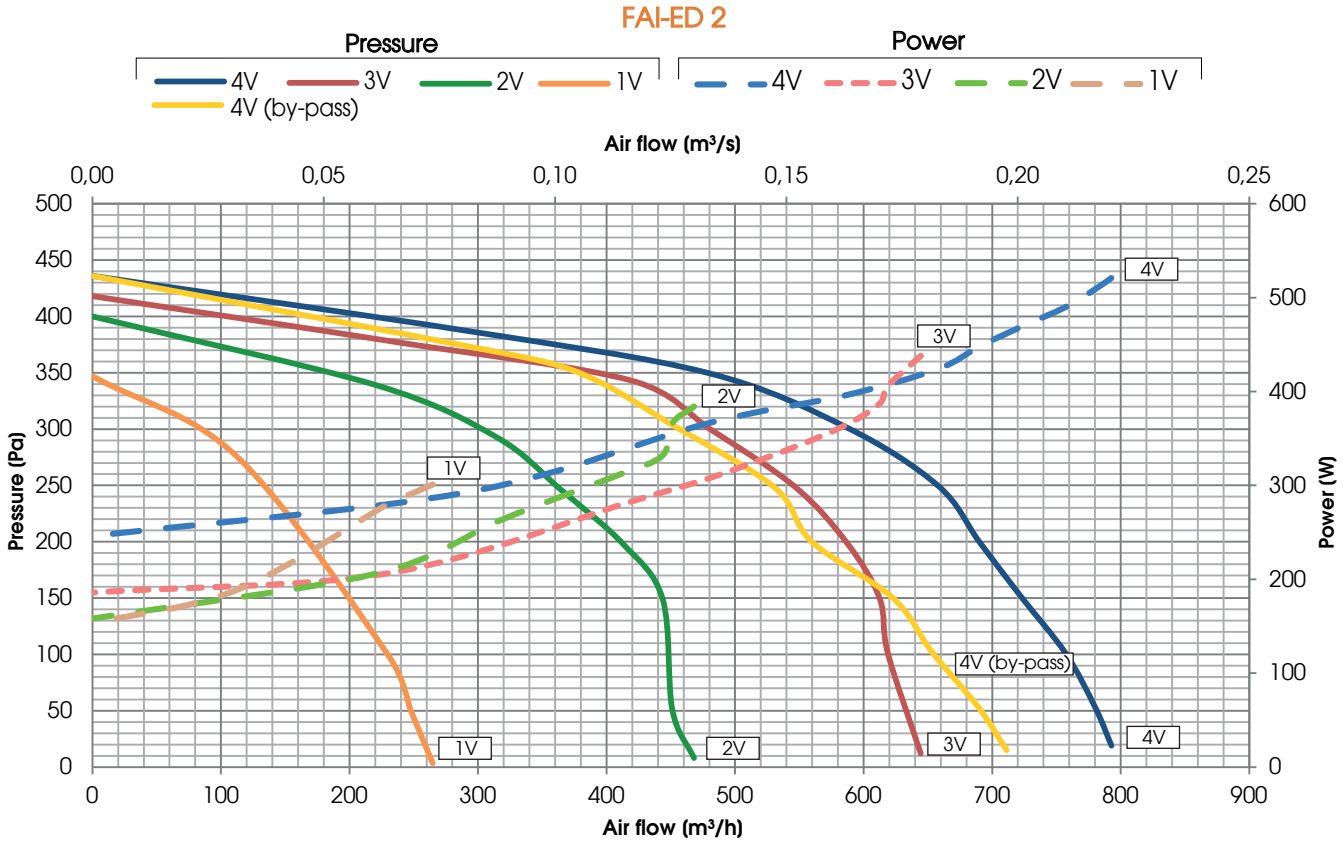

PERFORMANCE (UNI EN 13141-7)

The unit must be ducted properly: UTEK authorizes the use only according to its performance diagram shown into this catalogue
The declared performances are with CLEAN filters, and guaranteed ONLY with the original filters UTEK low pressure drop.

FAI-ED 3

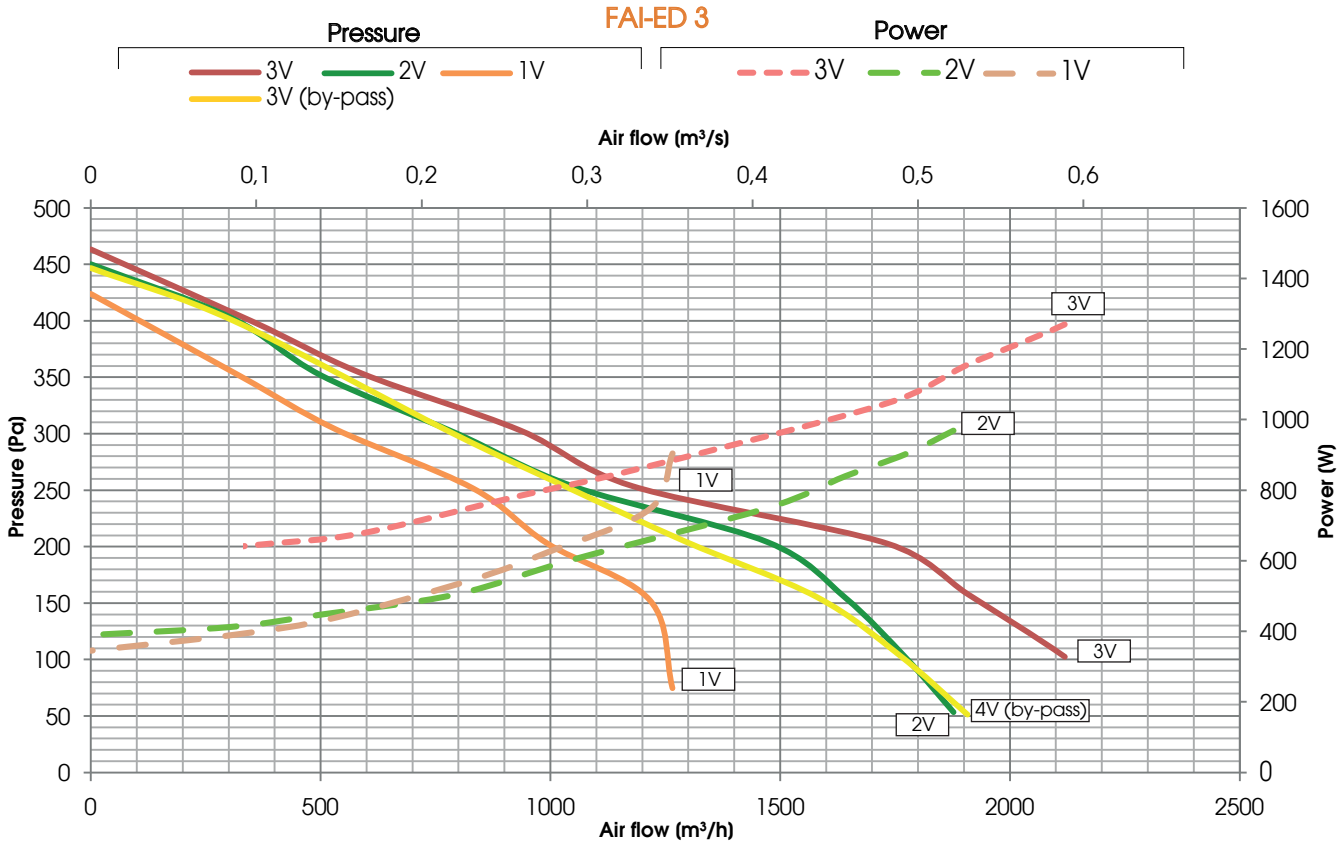

NOTE: for the units FAI-ED 1 and 2, the speed 1V It is NOT wired;
the first speed selectable from the control panel corresponds to the performance curve 2V

FAI-ED 4

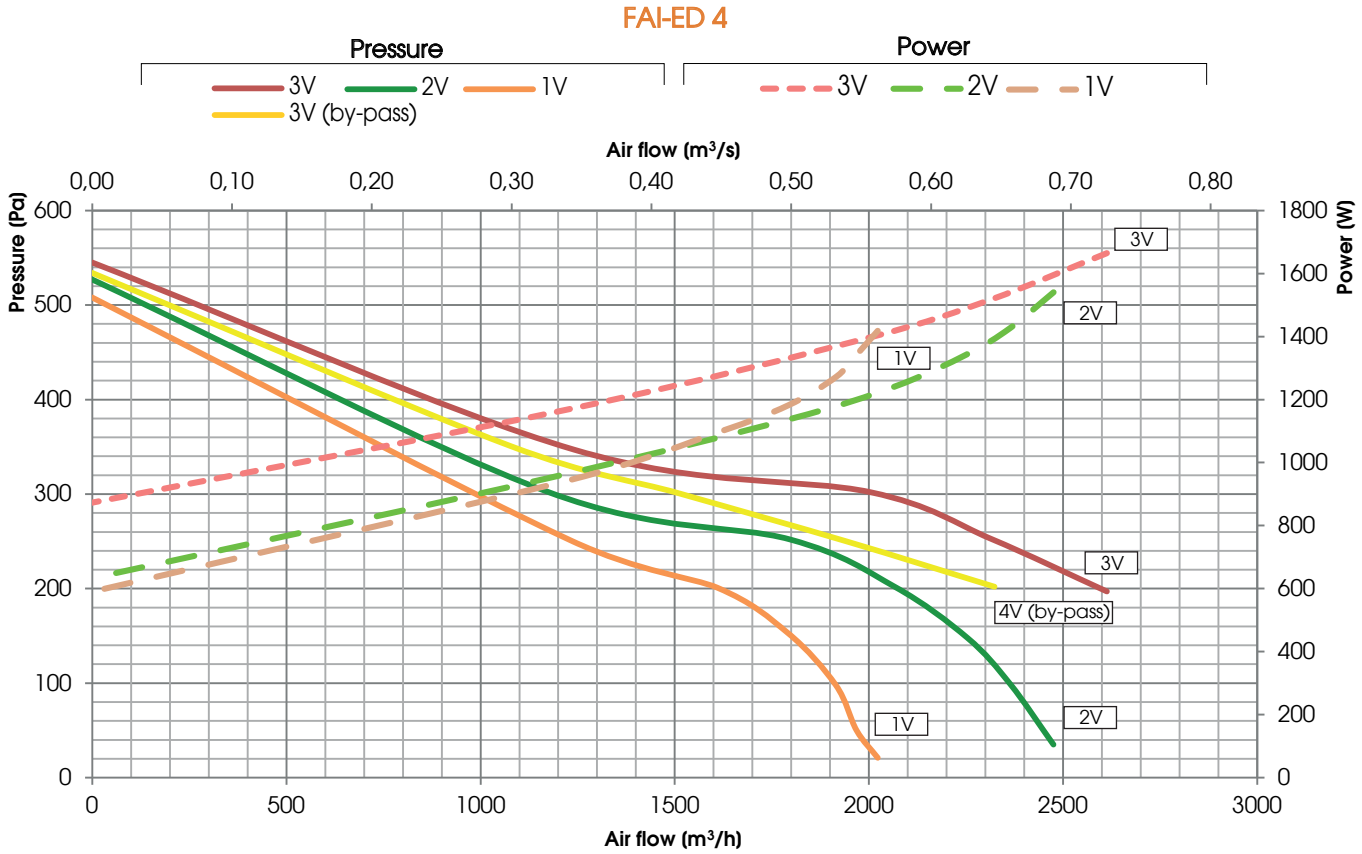

PERFORMANCE (UNI EN 13141-7)

The unit must be ducted properly: UTEK authorizes the use only according to its performance diagram shown into this catalogue
The declared performances are with CLEAN filters, and guaranteed ONLY with the original filters UTEK low pressure drop.

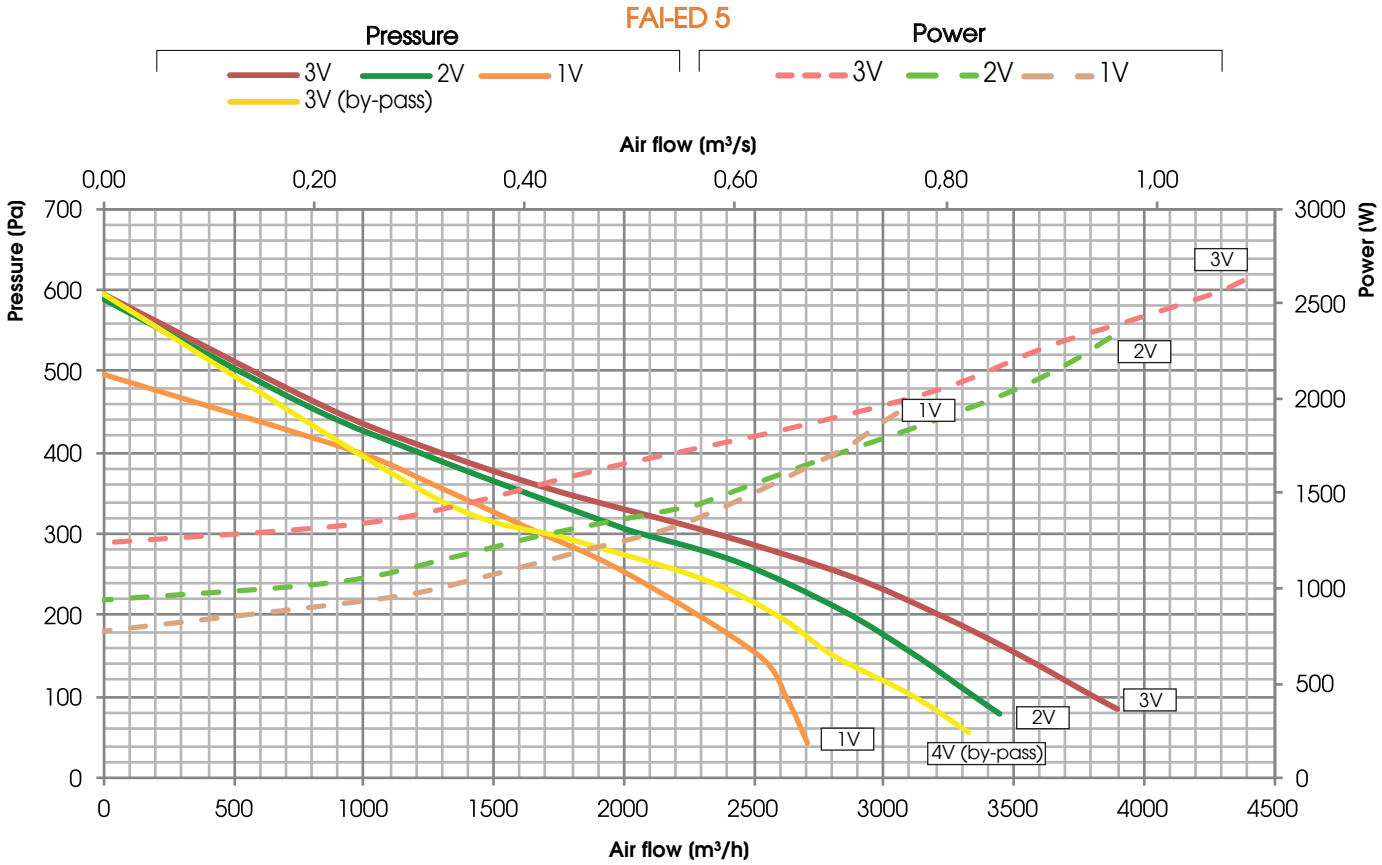

HEAT RECOVERY PERFORMANCE (sensible efficiency)

Values refered to the following conditions (UNI EN 308:1998): Tbs external air 5°C; U.R. esternal 72%; Tbs enviorment 25°C; U.R. enviorment 38%

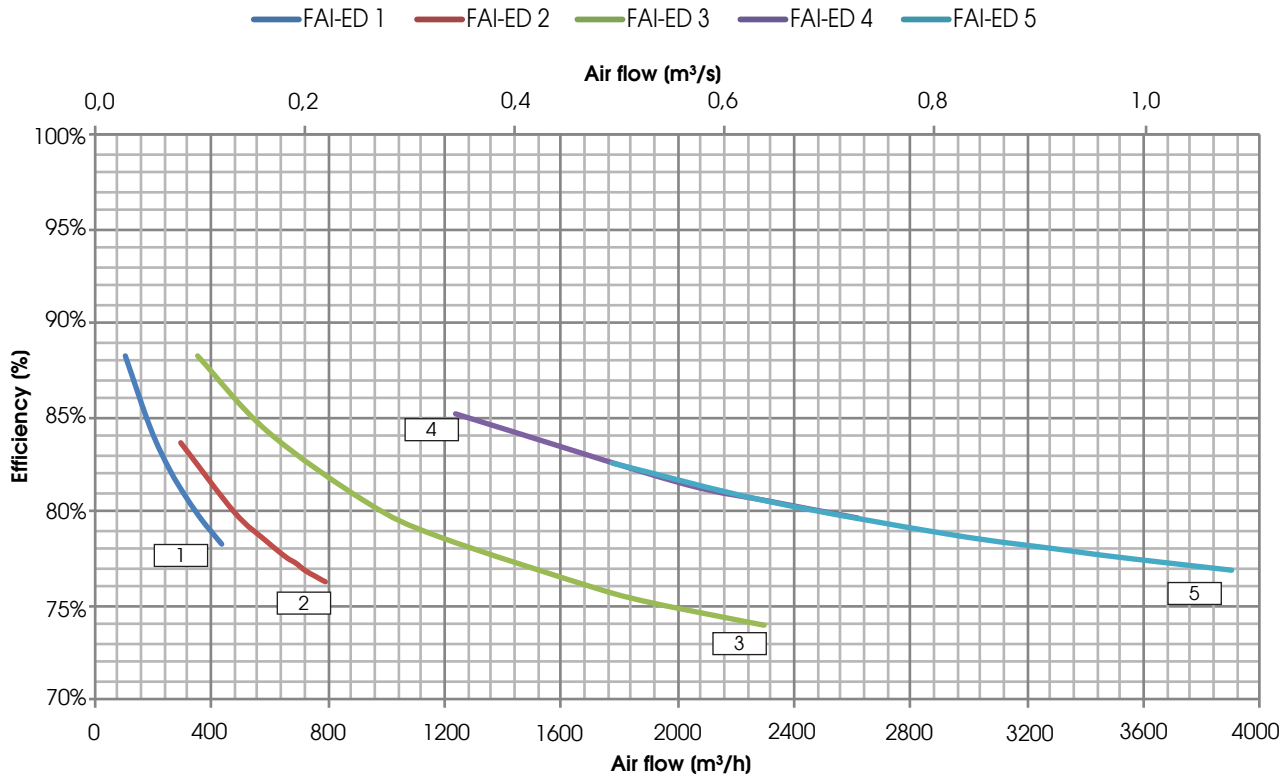

ECODESIGN

UNIT	η_{t_nvru} (%)	q_{nom} (m³/s)	$\Delta p_{s,ext}$ (Pa)	P (kW)	SFPint (W/(m³/s))	SFPint_lim 2016 (W/(m³/s))	SFPint_lim 2018 (W/(m³/s))	FACE VELOCITY (m/s)	$\Delta p_{s,int}$ (Pa)	η_{Fan} (%)	* Internal LEAKAGE (%)	* External LEAKAGE (%)
FAI-ED 1	78,9	0,1	100	0,25	1099	1542	1262	1,30	234	19,4%	9,8%	6,5%
FAI-ED 2	76,8	0,2	150	0,47	986	1464	1184	1,34	270	27,7%	6,8%	3,5%
FAI-ED 3	75,8	0,4	200	1,05	1067	1390	1110	1,27	360	34,6%	5,2%	2,8%
FAI-ED 4	80,1	0,7	200	1,66	1046	1486	1206	1,15	379	36,2%	5,0%	2,7%
FAI-ED 5	79,5	0,7	250	2,05	1047	1457	1177	1,26	376	33,8%	4,6%	2,5%

* Percentage of the nominal flow

VALUES ACCORDING UNI EN 1886: 2008

MOD.	CASING STRENGTH	CASING LEAKAGE	FILTER CLASS	THERMAL TRANSMITTANCE	THERMAL BRIDGE
FAI-ED 1	D1 (M)	L3 (M)	F7 (M)	T4 (M)	TB4 (M)
FAI-ED 2	D1 (M)	L3 (M)	F7 (M)	T4 (M)	TB4 (M)
FAI-ED 3	D1 (M)	L3 (M)	F7 (M)	T4 (M)	TB4 (M)
FAI-ED 4	D1 (M)	L3 (M)	F7 (M)	T4 (M)	TB4 (M)
FAI-ED 5	D1 (M)	L3 (M)	F7 (M)	T4 (M)	TB4 (M)

TEST LEAKAGE (UNI EN 13141-7)

LEAKAGE	TEST CONDITIONS	FAI-ED 1	FAI-ED 2	FAI-ED 3	FAI-ED 4	FAI-ED 5
OUTDOOR	Positive pressure 400 Pa	A3	A2	A2	A2	A1
OUTDOOR	Negative pressure 400 Pa	A2	A2	A1	A1	A1
INDOOR	Pressure difference 250 Pa	A3	A3	A2	A2	A2

NOISE LEVEL

Lw Sound power level taken in accordance to UNI EN ISO 3747 - CLASS 3

		NOISE FROM THE CASE (dB)							
		125 Hz	250 Hz	500 Hz	1000 Hz	2000 Hz	4000 Hz	8000 Hz	L_w dB(A)
FAI-ED 1	4V	59,0	62,5	53,5	47,4	39,9	35,7	39,6	56,6
FAI-ED 2	4V	59,5	65,4	58,5	53,2	47,0	39,1	41,1	60,6
FAI-ED 3	3V	74,1	71,7	65,1	61,6	52,4	46,4	46,0	67,7
FAI-ED 4	3V	72,0	69,0	60,3	63,0	56,6	49,3	49,9	66,8
FAI-ED 5	3V	75,6	73,6	69,7	66,1	59,4	52,3	53,9	71,5

		NOISE IN THE SUPPLY AIR DUCTS (dB)							
		125 Hz	250 Hz	500 Hz	1000 Hz	2000 Hz	4000 Hz	8000 Hz	L_w dB(A)
FAI-ED 1	4V	56,8	61,6	59,3	52,9	49,7	48,7	52,3	60,7
	3V	53,3	57,0	53,0	46,8	42,2	37,3	40,8	54,1
	2V	52,3	54,9	52,1	46,3	37,9	31,3	37,8	52,6

		NOISE IN THE SUPPLY AIR DUCTS (dB)							
		125 Hz	250 Hz	500 Hz	1000 Hz	2000 Hz	4000 Hz	8000 Hz	L_w dB(A)
FAI-ED 2	4V	62,9	72,3	68,8	62,7	62,8	60,6	65,8	71,7
	3V	61,6	68,6	64,9	60,2	57,9	57,0	62,3	68,0
	2V	58,3	61,6	58,9	56,2	51,2	50,1	53,5	61,7

		NOISE IN THE SUPPLY AIR DUCTS (dB)							
		125 Hz	250 Hz	500 Hz	1000 Hz	2000 Hz	4000 Hz	8000 Hz	L_w dB(A)
FAI-ED 3	3V	73,0	77,4	72,6	76,4	68,4	67,0	69,6	79,2
	2V	69,8	72,8	70,4	73,1	66,1	65,0	66,5	76,2
	1V	64,7	70,8	65,5	66,2	58,7	56,9	56,3	69,8

		NOISE IN THE SUPPLY AIR DUCTS (dB)							
		125 Hz	250 Hz	500 Hz	1000 Hz	2000 Hz	4000 Hz	8000 Hz	L_w dB(A)
FAI-ED 4	3V	74,4	74,7	74,7	74,2	69,3	67,0	70,1	78,5
	2V	72,5	71,9	74,3	70,3	63,7	63,2	66,2	75,5
	1V	72,0	79,6	72,2	67,2	60,4	58,9	61,2	74,7

		NOISE IN THE SUPPLY AIR DUCTS (dB)							
		125 Hz	250 Hz	500 Hz	1000 Hz	2000 Hz	4000 Hz	8000 Hz	L_w dB(A)
FAI-ED 5	3V	78,7	80,9	79,9	80,3	76,1	75,5	79,6	85,4
	2V	75,3	76,8	76,1	75,7	71,8	71,6	75,4	81,1
	1V	69,9	70,7	71,2	69,6	65,3	64,5	66,8	74,6

ELECTRICAL DATA

MATCHING	FANS				UNIT FAI-ED		
	Power (W)	Supply	Current max.(A)	Insulation class	Supply	Current max.(A)	Insulation class
FAI ED 1	2 x 150	230V 50 Hz 1F	2 x 0,7	IP20 CLASSE F	230V 50 Hz 1F	1,4	IP20
FAI ED 2	2 x 290	230V 50 Hz 1F	2 x 1,3	IP20 CLASSE F	230V 50 Hz 1F	2,7	IP20
FAI ED 3	2 x 400	230V 50 Hz 1F	2 x 3,8	IP20 CLASSE F	230V 50 Hz 1F	7,7	IP20
FAI ED 4	2 x 550	230V 50 Hz 1F	2 x 4,8	IP20 CLASSE F	230V 50 Hz 1F	9,7	IP20
FAI ED 5	2 x 750	230V 50 Hz 1F	2 x 9,6	IP20 CLASSE B	230V 50 Hz 1F	19,3	IP20

FAI-ED H

DIMENSIONS (mm) WEIGHT (kg)

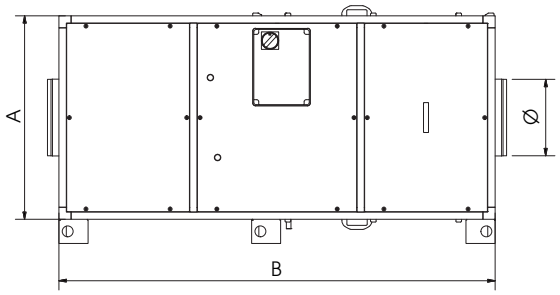

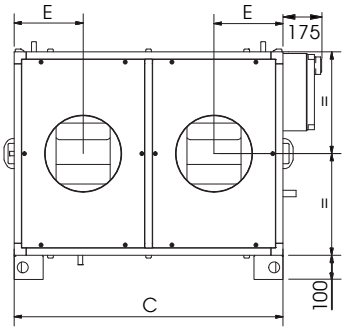

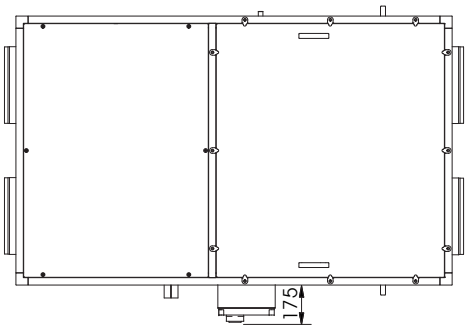

NOTE: for FAI-ED 1 and 2 there are no the feet but the brackets

UNIT	Dimensions (mm)					
	A	B	C	Ø	E	Weight(kg)
FAI-ED H 1	450	1420	900	200	232	99
FAI-ED H 2	550	1420	900	250	232	115
FAI-ED H 3	840	1800	1100	315	285	276
FAI-ED H 4/5	1050	2180	1340	400	342	363/379

FAI-ED V

DIMENSIONS (mm) WEIGHT (kg)

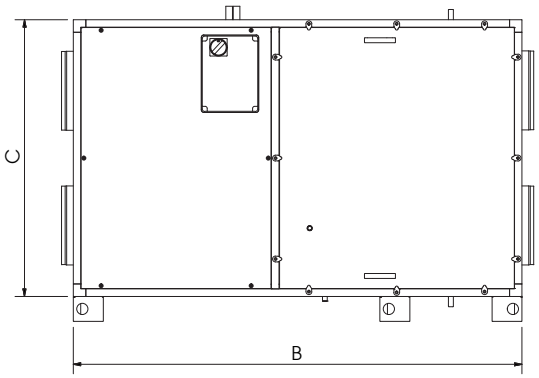

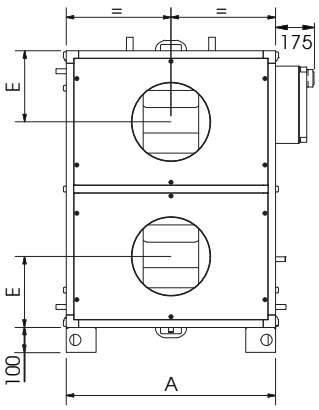

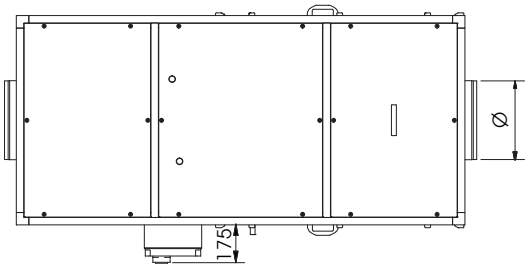

UNIT	Dimensions (mm)					
	A	B	C	Ø	E	Weight(kg)
FAI-ED V 1	450	1420	900	200	232	99
FAI-ED V 2	550	1420	900	250	232	115
FAI-ED V 3	840	1800	1100	315	285	276
FAI-ED V 4/5	1050	2180	1340	400	342	363/379

INSTALLATION FAI-ED H

FLOOR INSTALLATION

Minimum required space for maintenance (mm)

FI= filters, H.E.=heat exchanger, V=ventilators, E.C.= electrical cabinet

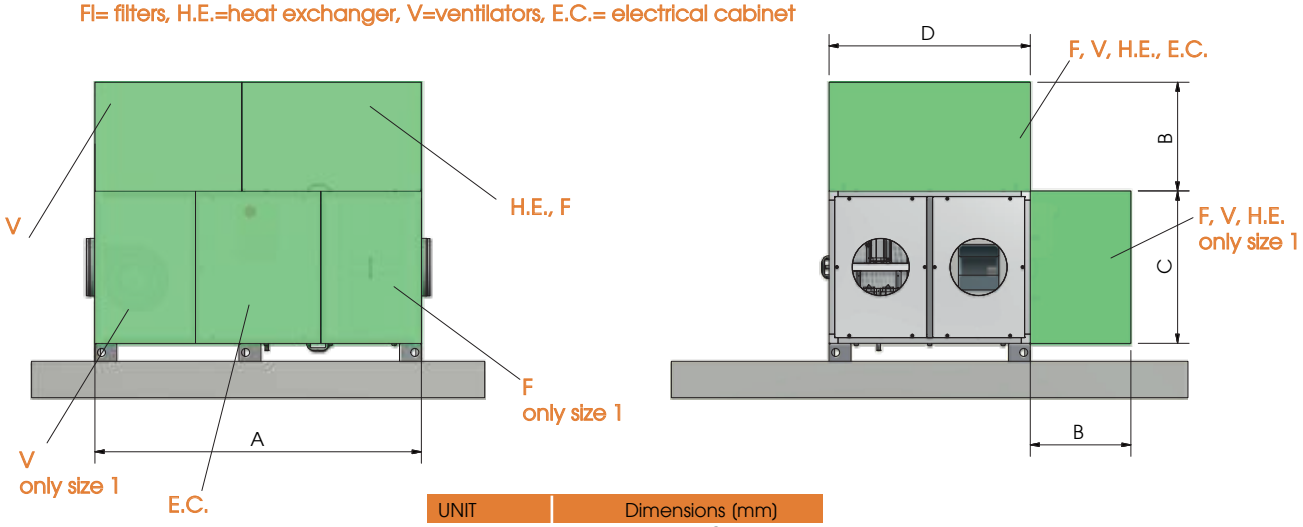

UNIT	Dimensions (mm)			
	A	B	C	D
FAI-ED H 1	1420	600	450	900
FAI-ED H 2	1420	600	550	900
FAI-ED H 3	1800	800	840	1100
FAI-ED H 4/5	2180	800	1050	1340

CEILING INSTALLATION

Minimum required space for maintenance (mm)

FI= filters, H.E.=heat exchanger, V=ventilators, E.C.= electrical cabinet

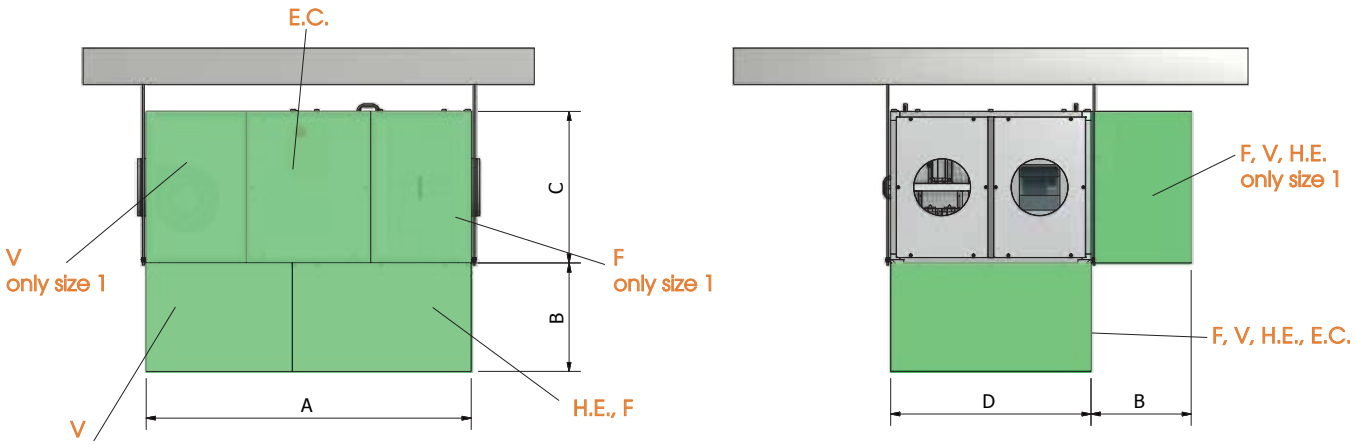

UNIT	Dimensions (mm)			
	A	B	C	D
FAI-ED H 1	1420	600	450	900
FAI-ED H 2	1420	600	550	900

The ceiling installation for 3-4-5 size of FAI-ED H it is not recommended. The manufacturer is not responsible for injury to persons or damages to things in case of this type of installation. **CAUTION:** The operations of inspection of the heat exchanger for these sizes can not be made manually for the high weight of the same which would result in an unacceptable level of risk.

INSTALLATION FAI-ED V

FLOOR INSTALLATION

Minimum required space for maintenance (mm)

FI= filters, H.E.=heat exchanger, V=ventilators, E.C.= electrical cabinet

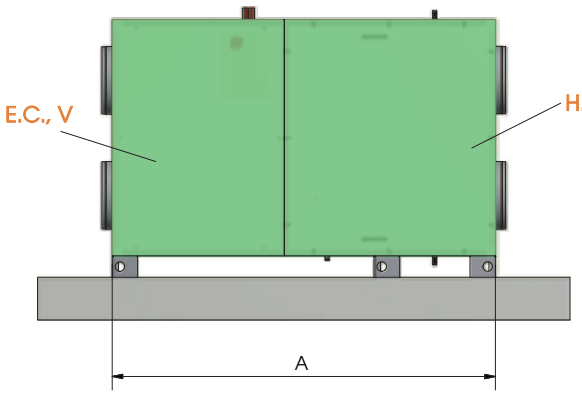

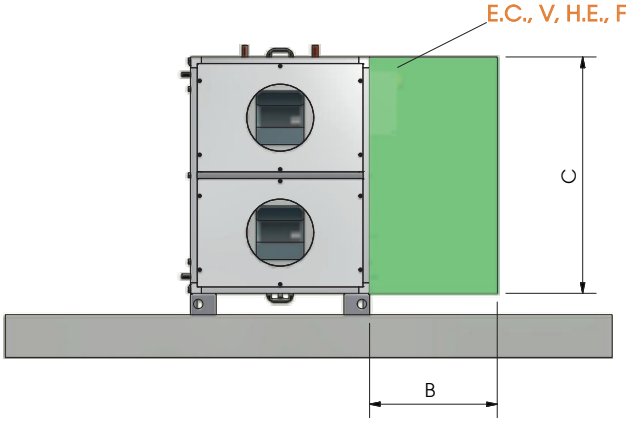

UNIT	Dimensions (mm)		
	A	B	D
FAI-ED V 1	1420	600	900
FAI-ED V 2	1420	600	900
FAI-ED V 3	1800	800	1110
FAI-ED V 4/5	2180	800	1340

STANDARD SIPHON (mm)

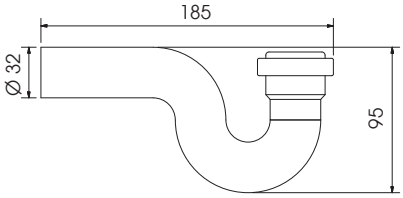

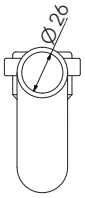

N.B .: predict 1 additional siphon if there is the cold water coil BA-AF / AC or DX gas (duct)

The way to read the graphs is specified within the accessories techno-list

COILS FAI-ED 1

Heating water coil (45°C/35°C)

Ø WATER ("gas)	N. ROWS	FIN PITCH (mm)	INT.VOL. (dm³)	MATERIALS		
				TUBES	FINS	FRAME
1/2"	2	2,5	1	Cu	Al	Fe Zn

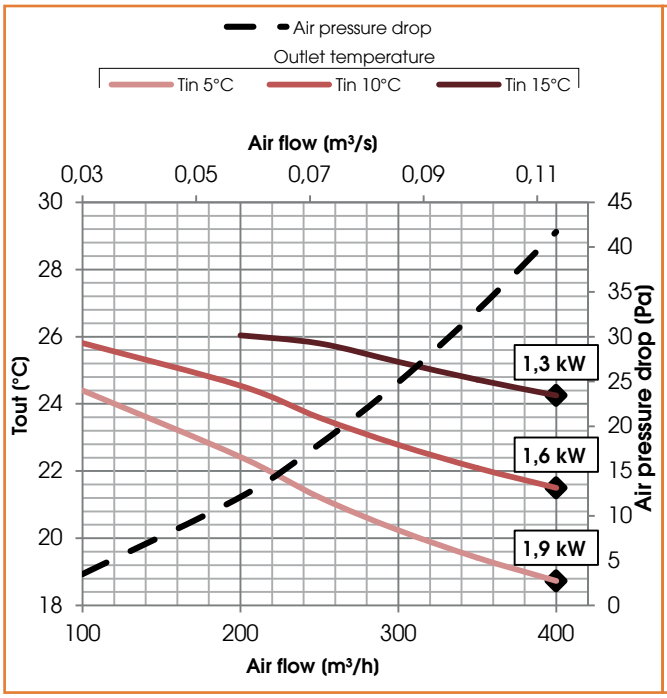

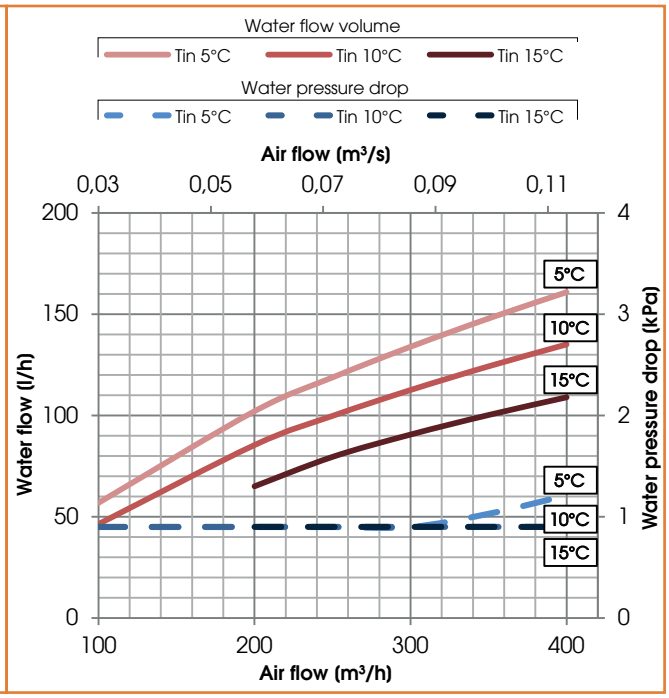

COIL FAI-ED 2

Heating water coil (45°C/35°C)

Ø WATER ("gas)	N. ROWS	FIN PITCH (mm)	INT.VOL. (dm³)	MATERIALS		
				TUBES	FINS	FRAME
1/2"	2	2,5	1	Cu	Al	Fe Zn

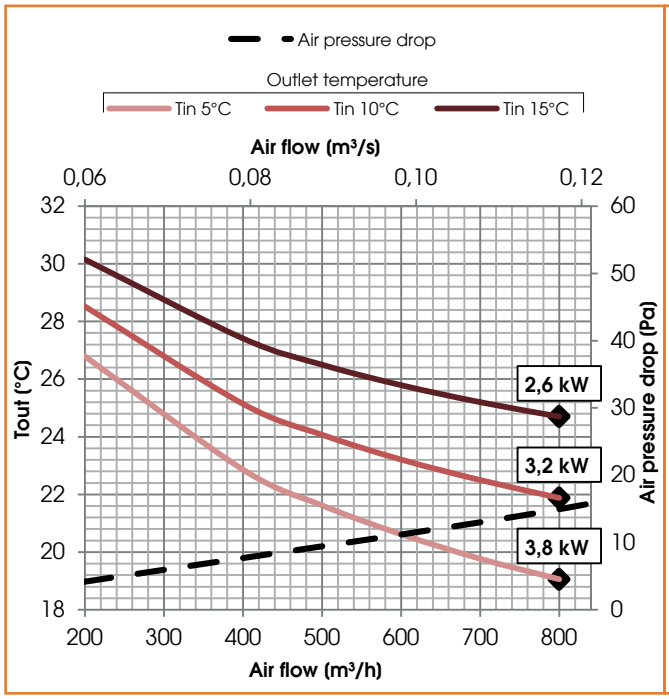

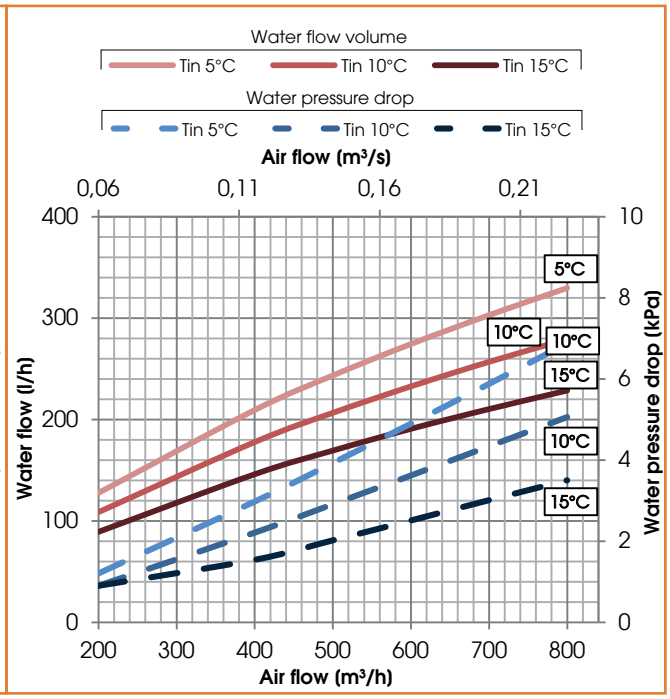

COILS FAI-ED 3

Heating water coil (45°C/35°C)

Ø WATER ("gas)	N. ROWS	FIN PITCH (mm)	INT.VOL. (dm³)	MATERIALS		
				TUBES	FINS	FRAME
1/2"	2	3,0	2	Cu	Al	Fe Zn

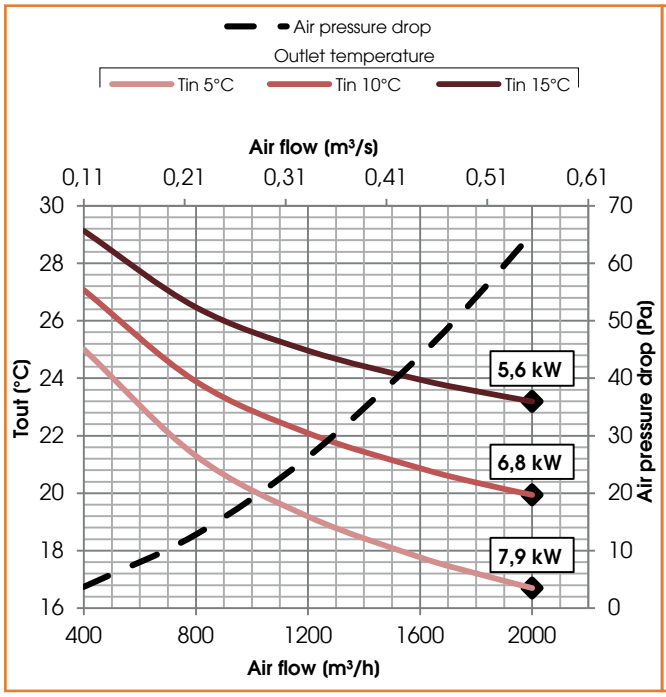

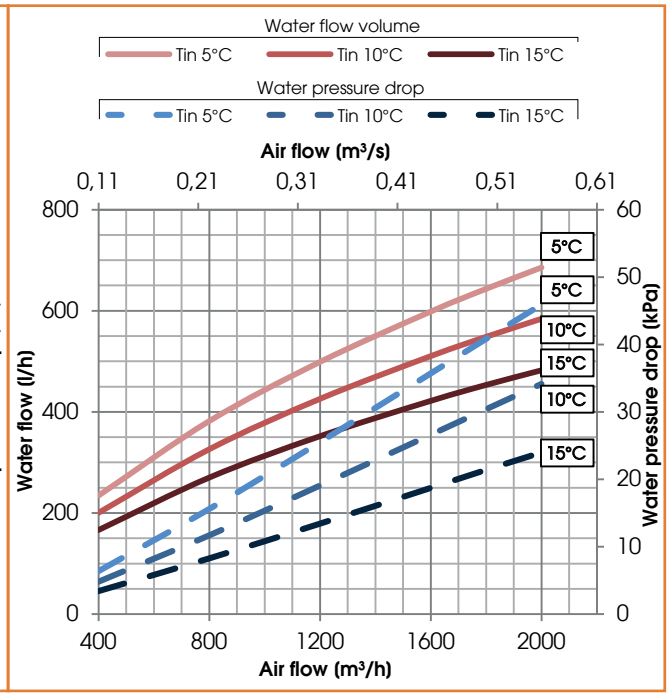

COILS FAI-ED 4 e FAI-ED 5

Heating water coil (45°C/35°C)

Ø WATER ("gas)	N. ROWS	FIN PITCH (mm)	INT.VOL. (dm³)	MATERIALS		
				TUBES	FINS	FRAME
3/4"	2	2,5	3	Cu	Al	Fe Zn

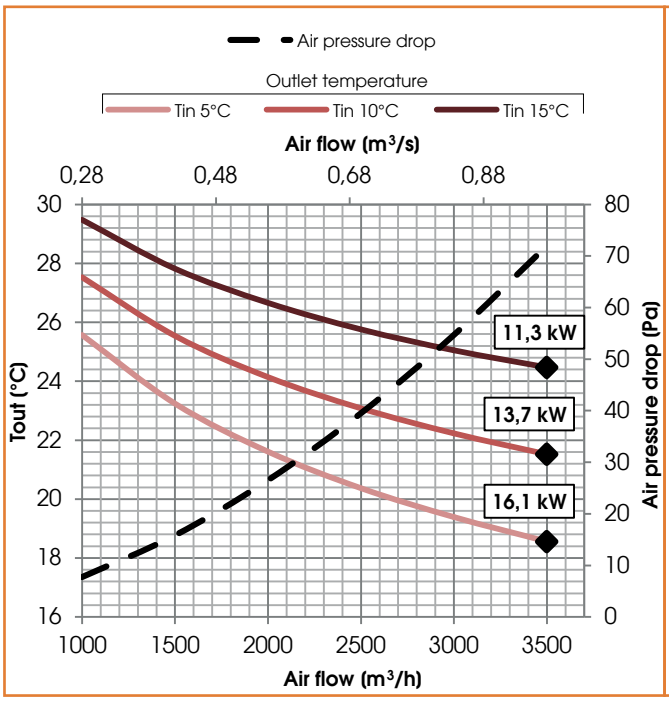

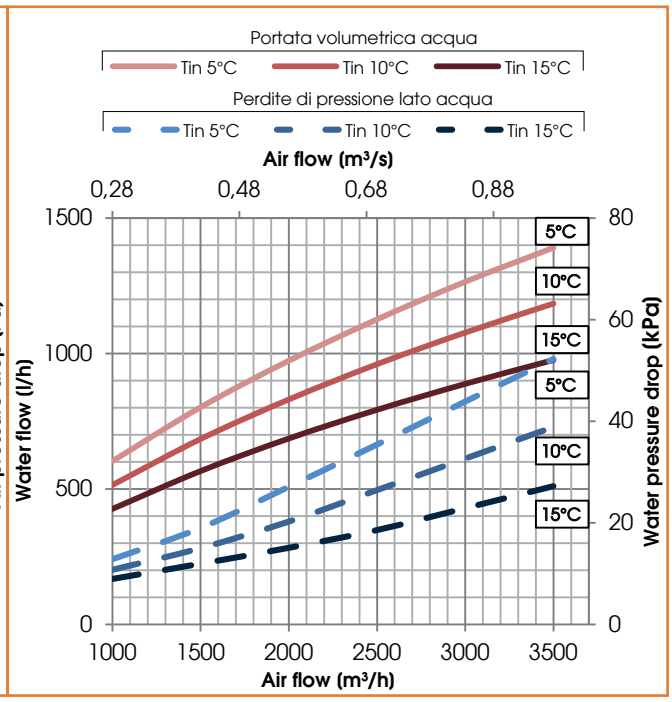

Electrical heater

ELECTRICAL DATA RESISTANCE OF PRE / POST HEATING				
Unit	Power Supply	Power (kW)	Current (A)	N. stages
FAI-ED 1	230V, 50Hz,1F	2	8,7	1
FAI-ED 2	230V, 50Hz,1F	4	17,4	1
FAI-ED 3	230V, 50Hz,1F	6	26,1	1
FAI-ED 4	230V, 50Hz,1F	8	34,8	1
FAI-ED 4	400V, 50Hz,3F	8	11,6	1
FAI-ED 5	400V, 50Hz,3F	12	17,4	1

N.B. – for other batteries PRE or POST treatment see the Techno-list of ACCESSORIES

CV3

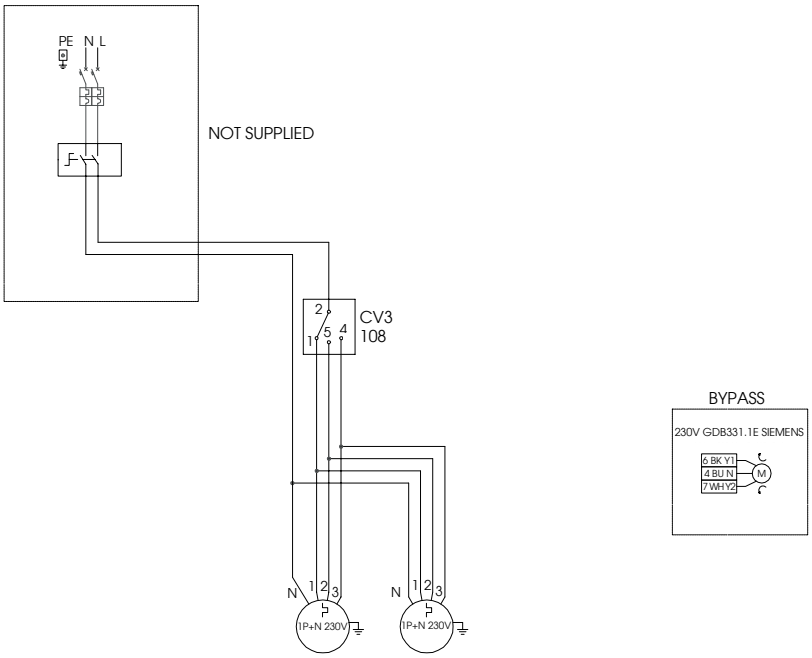

CV4

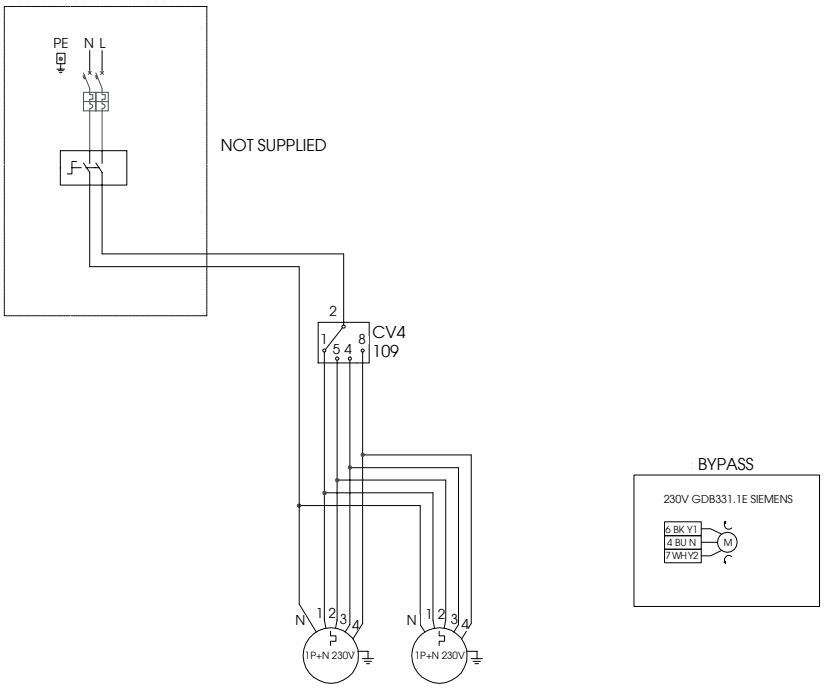

DX coil- FAI-ED 1

DIRECT EXPANSION COIL (R410A						
Air flow (m³/h)	Tin (°C)	R.H. in (%)	Power (kW)	Tout (°C)	R.H. out (%)	Air pressure drop (Pa)
396	25	50	1,96	13,6	86	16

Ø connection(mm)	Fin pitch (mm)	N. Rows	Int.Vol.(dm³)	T evap (°C)	T cond (°C)
22-16	3,0	3	1,0	5	50

DX coil- FAI-ED 2

DIRECT EXPANSION COIL (R410A						
Air flow (m³/h)	Tin (°C)	R.H. in (%)	Power (kW)	Tout (°C)	R.H. out (%)	Air pressure drop (Pa)
828	25	50	3,59	15,4	78,7	53

Ø connection(mm)	Fin pitch (mm)	N. Rows	Int.Vol.(dm³)	T evap (°C)	T cond (°C)
18-12	2,5	3	1,1	5	50

DX coil- FAI-ED 3

DIRECT EXPANSION COIL (R410A						
Air flow (m³/h)	Tin (°C)	R.H. in (%)	Power (kW)	Tout (°C)	R.H. out (%)	Air pressure drop (Pa)
1260	25	50	6,18	14,1	83,6	50

Ø connection(mm)	Fin pitch (mm)	N. Rows	Int.Vol.(dm³)	T evap (°C)	T cond (°C)
18-12	2,5	3	2,3	5	50

DX coil- FAI-ED 4

DIRECT EXPANSION COIL (R410A						
Air flow (m³/h)	Tin (°C)	R.H. in (%)	Power (kW)	Tout (°C)	R.H. out (%)	Air pressure drop (Pa)
1980	25	50	8,01	15,9	77,3	32

Ø connection(mm)	Fin pitch (mm)	N. Rows	Int.Vol.(dm³)	T evap (°C)	T cond (°C)
18-12	2,5	2	2,6	5	50

DX coil- FAI-ED 5

DIRECT EXPANSION COIL (R410A						
Air flow (m³/h)	Tin (°C)	R.H. in (%)	Power (kW)	Tout (°C)	R.H. out (%)	Air pressure drop (Pa)
2700	25	50	10,93	16	76,7	36

Ø connection(mm)	Fin pitch (mm)	N. Rows	Int.Vol.(dm³)	T evap (°C)	T cond (°C)
22-12	2,5	2	3,2	5	50

A	Manufacturer's name UTEK srl				
B	Manufacturer's model identifier	FAIED 1 BP EVO-PH SH	FAIED 2 BP EVO-PH SH	FAIED 3 BP EVO-PH SH	FAIED 4 BP EVO-PH SH
C	Declared typology	UVNR / UVB	UVNR / UVB	UVNR / UVB	UVNR / UVB
D	Type of drive installed	Multiple speeds	Multiple speeds	Multiple speeds	Multiple speeds
E	Type of HRS	other	other	other	other
F	Thermal efficiency of heat recovery (%)	78,9	76,8	75,8	80,1
G	Nominal NRVU flow rate (m^3/s)	0,111	0,201	0,484	0,721
H	Effective electric power input (kW)	0,25	0,47	1,05	1,66
I	SFPint (W/(m^3/s)	1099	986	1067	1048
J	Face velocity at design flow rate (m/s)	1,3	1,3	1,3	1,2
K	Nominal external pressure (Pa)	100	150	200	200
L	Internal pressure drop of ventilation components (Pa)	234	270	360	379
M	Optional: internal pressure drop of non-ventilation components			-	-
N	Static efficiency of fans used in accordance with Regulation (EU) No 327/2011 (%)	19,4	27,7	34,6	36,2
O	Declared maximum external leakage rate of the casing of ventilation units (%)	6,5	3,5	2,8	2,7
	Declared maximum internal leakage rate of bidirectional ventilation units or carry over (for regenerative heat exchangers only) (%)	9,8	6,8	5,2	5,0
P	Energy performance, preferably energy classification, of the filters (declared information about the calculated annual energy consumption	ePM1 70% (F7) ePM10 50% (M5)	ePM1 70% (F7) ePM10 50% (M5)	ePM1 75% (F7) ePM10 50% (M5)	ePM1 70% (F7) ePM10 50% (M5)
Q	Position and description of visual filter warning for RVUs intended for use with filters, including text pointing out the importance of regular filter changes for performance and energy efficiency of the unit	Filter warning is signaled on the display of the control system: the flashing writing "DirtyFilters" will appear. "To preserve the energy efficiency of the NRVU, it's recommended to replace the filters when signaled." Positioned near the filters inspection			
R	Casing sound power level (LWA) (dB)	57	61	68	67
S	Internet address for pre-/dis-assembly instructions	www.utek.it			

A	Manufacturer's name UTEK srl	
B	Manufacturer's model identifier	FAIED 5 BP EVO-PH SH
C	Declared typology	UVNR / UVB
D	Type of drive installed	multi speeds
E	Type of HRS	other
F	Thermal efficiency of heat recovery (%)	79,5
G	Nominal NRVU flow rate (m^3/s)	0,816
H	Effective electric power input (kW)	2,05
I	SFPint (W/(m^3/s)	1047
J	Face velocity at design flow rate (m/s)	1,2
K	Nominal external pressure (Pa)	250
L	Internal pressure drop of ventilation components (Pa)	376
M	Optional: internal pressure drop of non-ventilation components	–
N	Static efficiency of fans used in accordance with Regulation (EU) No 327/2011 (%)	33,8
O	Declared maximum external leakage rate of the casing of ventilation units (%)	2,5
	Declared maximum internal leakage rate of bidirectional ventilation units or carry over (for regenerative heat exchangers only) (%)	4,6
P	Energy performance, preferably energy classification, of the filters (declared information about the calculated annual energy consumption	ePM1 70% (F7) ePM10 50% (M5)
Q	Position and description of visual filter warning for RVUs intended for use with filters, including text pointing out the importance of regular filter changes for performance and energy efficiency of the unit	Filter warning is signaled on the display of the control system: the flashing writing "DirtyFilters" will appear. "To preserve the energy efficiency of the NRVU, it's recommended to replace the filters when signaled." Positioned near the filters inspection
R	Casing sound power level (LWA) (dB)	72
S	Internet address for pre-/dis-assembly instructions	www.utek.it

Dear Customer

Thanks for your attention to the product UTEK , designed and manufactured to ensure the real values to the User : Quality, Safety and Savings on working.

Made in Italy

COMPANY WITH QUALITY SYSTEM CERTIFIED BY DNV GL
ISO 9001

the Dealer

FAI-ED_02_2018_EN

CLA S.r.l. Via Nazionale,132 23036 San Giacomo di Teglio (So) Italy Tel.+39 0342 786116 | utek-air.it | cla-air.it