Utek

indoor air quality and energy saving

TECHNICAL DATA

UNIT	CONTROL	ENERGETIC CLASS
MICRO-REV	CTR08-PH	A
	EVO(D)-PH	A
	EVO(D)-PH + probe	A
MICRO-REV ENT	CTR08-PH	B
	EVO(D)-PH	B
	EVO(D)-PH + probe	A

MICRO-REV

AVAILABLE ENTHALPIC VERSION

AVAILABLE MIRRORED VERSION

HEAT RECOVERY VENTILATION UNITS for RESIDENTIAL BUILDINGS

MICRO-REV
Residential ventilator unit with dual flow and high yield heat recovery.

PERFORMANCE

The unit is equipped with with an aluminum counter-flow heat exchanger (Eurovent certified) and electronic backward blade ventilators. The total bypass as standard allows favourable climatic conditions to be taken advantage of outside the building for free cooling (or free heating) in automatic mode.

STRUCTURE

MICRO-REV is manufactured using a self-supporting structure in 25 mm thick sandwich panels, insulated in polyurethane foam. The external part of the structure is manufactured in plastofilmed sheet metal in grey, while the internal part is in Aluzinc® material that ensures high resistance against corrosion. The access to filters (ePM1 70% (F7) for the renewed air flow and ePM10 50% (G4) for the extraction air flow) is particularly easy thanks to the two specific openings on the front panel. The enthalpy heat exchanger allows to recover sensible and latent energy from the air. It is not necessary to drain condensate, routine maintenance. Ideal for cold climates because the heated supply air is dry, resulting a dry indoor environment (without enthalpy exchanger); in summer removes moisture from the air inlet (more hot and humid then indoor air). Is prepared for installation inside buildings with an ambient temperature between 0°C and 45°C. It can be installed on a wall.

CONTROLS

The MICRO-REV is supplied with control system and easy connection to the power supply. It's also available the versions with simplified CTR-S control, the version with EVO-PH control and the version with EVOD-PH-IP control ready for integration in home automation systems (Modbus protocol with Ethernet connection or, upon request , with the addition of the RS485 connection).

The new version of our control systems allows the user to shift from one control system to another very quickly and easily by replacing the remote panel even after the installation.

The simplified CTR-S control allows you to select three speed levels for the fans or stop them, automatically manages the By-pass and prevents frosting of the heat exchanger by managing the speed of the fans; warns the user of the need to replace the filters or the occurrence of an anomaly. An "inlet" version is available without filter pressure switches (contamination control by hour counter with factory calibration), renewal G4 / G4 recovery filters and by-pass created by unbalancing fans (it is recommended to install a ventilation grid)

The EVO-PH control has a coloured, backlit touch screen interface with intuitive viewing of the working status of the machine. It enables precise adjustment of ventilator speed and has a weekly , time schedule for automatic management of the ventilators. It can be controlled by an external switch to activate the booster function, it can automatically adjust the air flow rate if connected to an air quality probe, it can manage any air post treatment accessories, it automatically manages the bypass and prevents heat exchanger freezing by managing the speed of the ventilators or, if installed, an electrical pre-heating resistor (optional accessory outside the machine); it signals to the user the need to replace the filters (the clogging status of the filters is monitored by a pair of different pressure switches, supplied as standard) or an anomaly, indicating the origin.

With the addition of optional accessories (COP kit and CAV kit installed on the channel) you can manage the ventilation machine in constant pressure or constant flow rate mode.

The EVOD-PH-IP control has the same characteristics as the EVO-PH version with the addition of Modbus communication protocol which allows full control of the machine by the supervision software of the home automation system. The implemented webserver allows interaction with the machine, even with an internet browser of a device connected (even from remote) to the home automation system in which the machine is inserted.

For a more complete view of the characteristics of the control panels, please read the specific manuals.

Counterflow heat exchanger made of aluminum manufactured by RECUTECH
RECUTECH participates in the Eurovent Certification Program

PERFORMANCES (UNI EN 13141-7)

The unit must be ducted properly: UTEK authorizes the use only according to its performance diagram shown into this catalogue
The declared performances are with CLEAN filters, and guaranteed ONLY with the original filters UTEK low pressure drop.

MICRO-REV

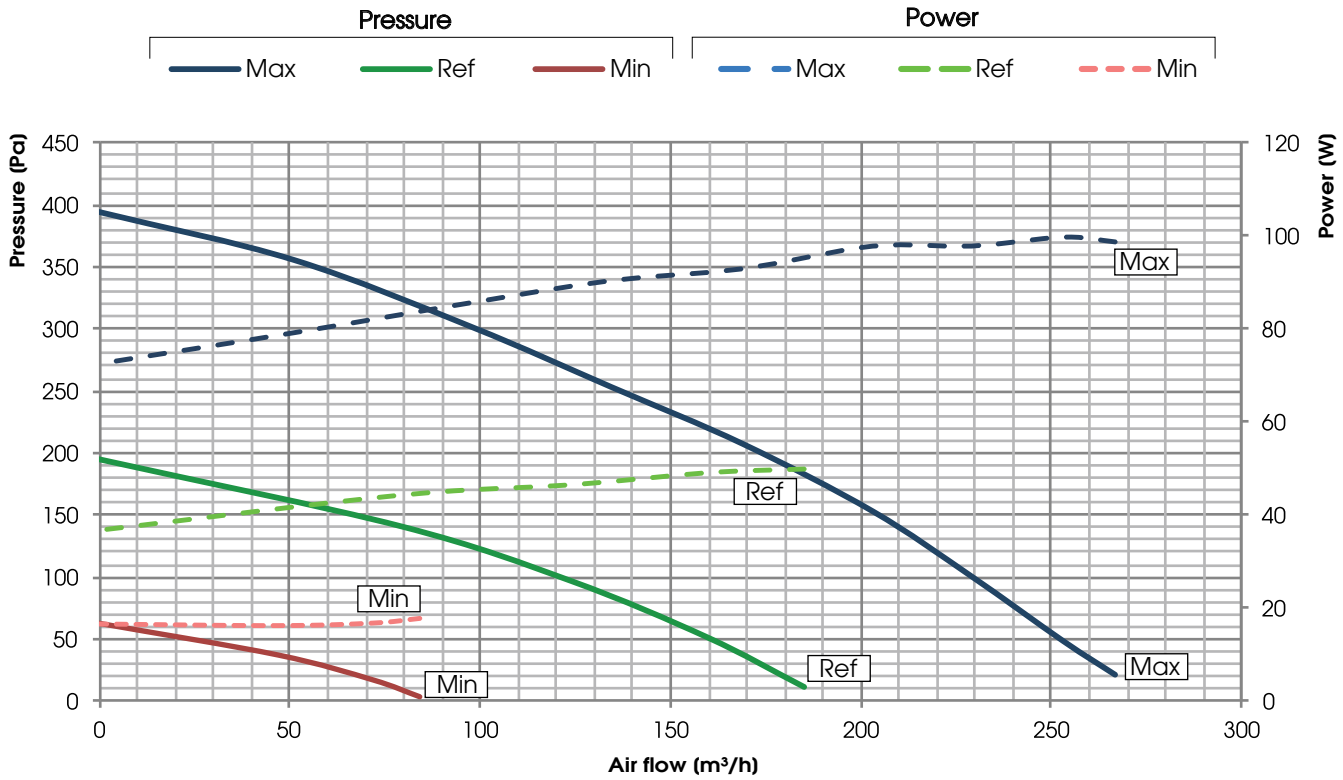

MICRO-REV ENT

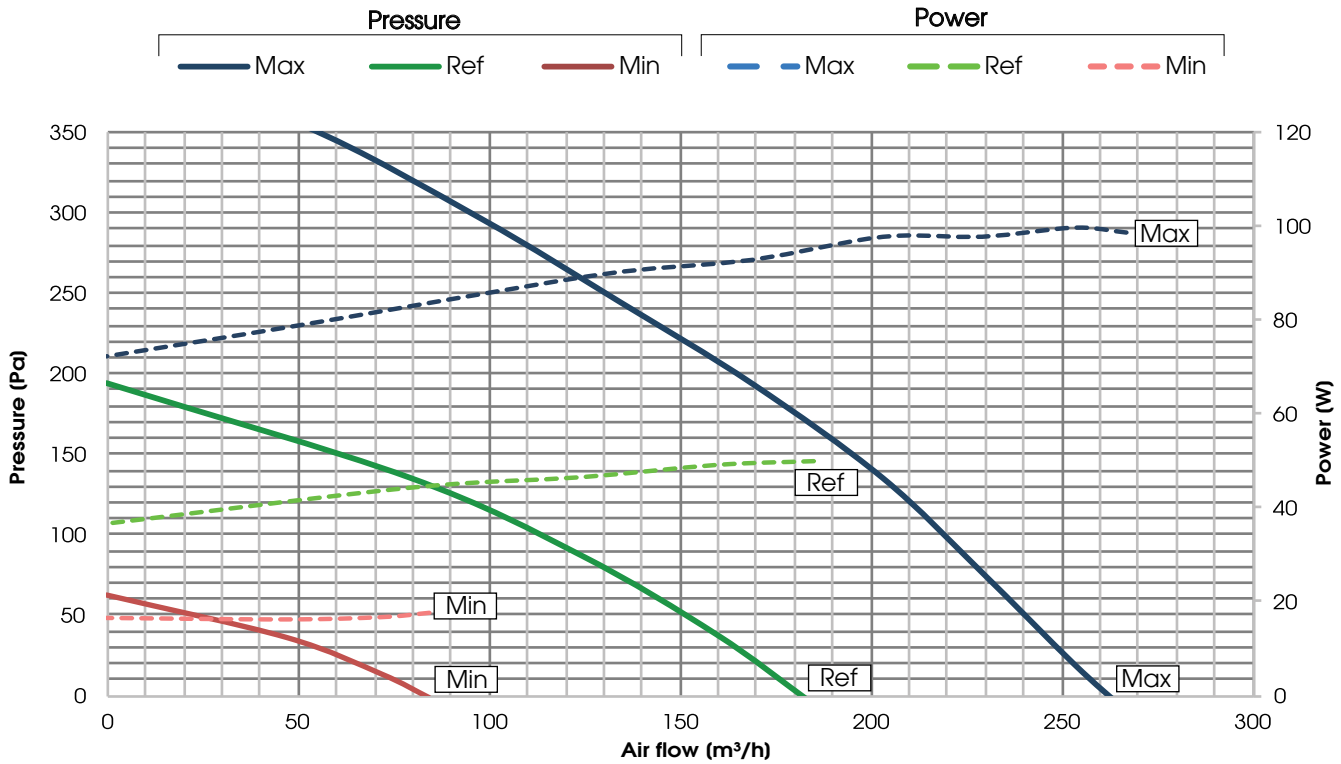

EFFICIENZA DI RECUPERO DEL CALORE SENSIBILE

Values refered to the following conditions (UNI EN 13141-7): Tbs external air 7°C; U.R. esternal 72%; Tbs enviorment 20°C; U.R. enviorment 28%

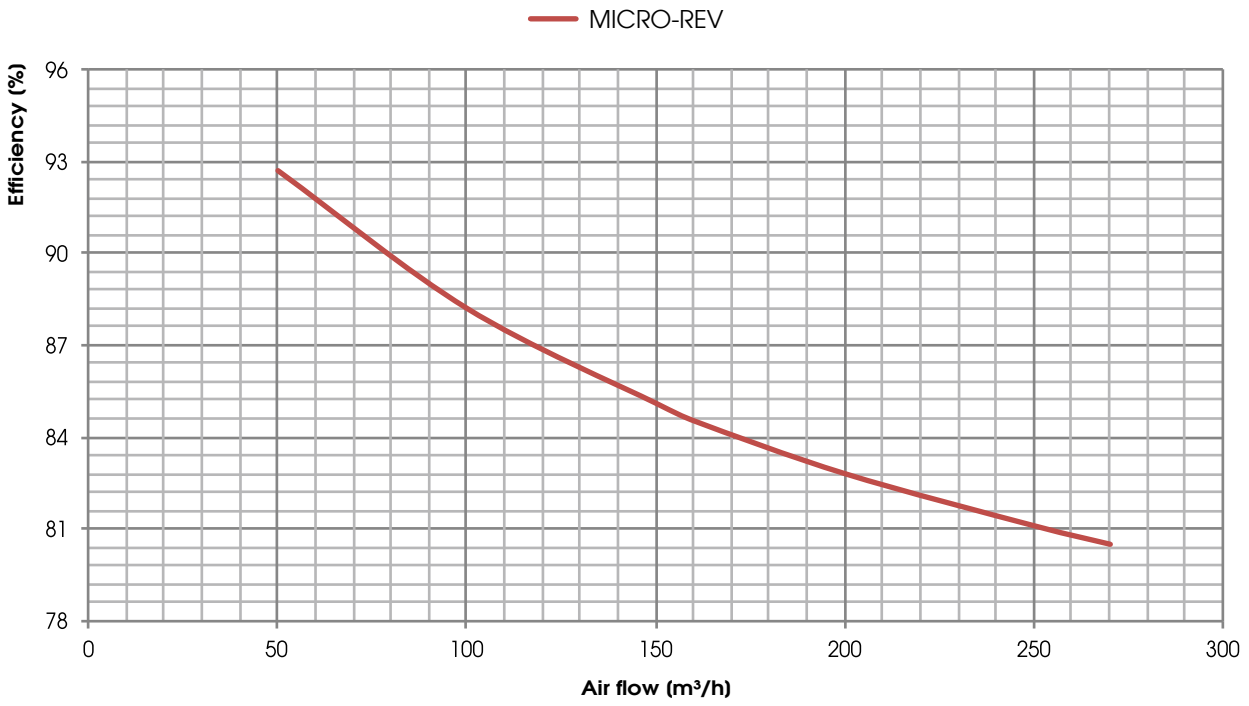

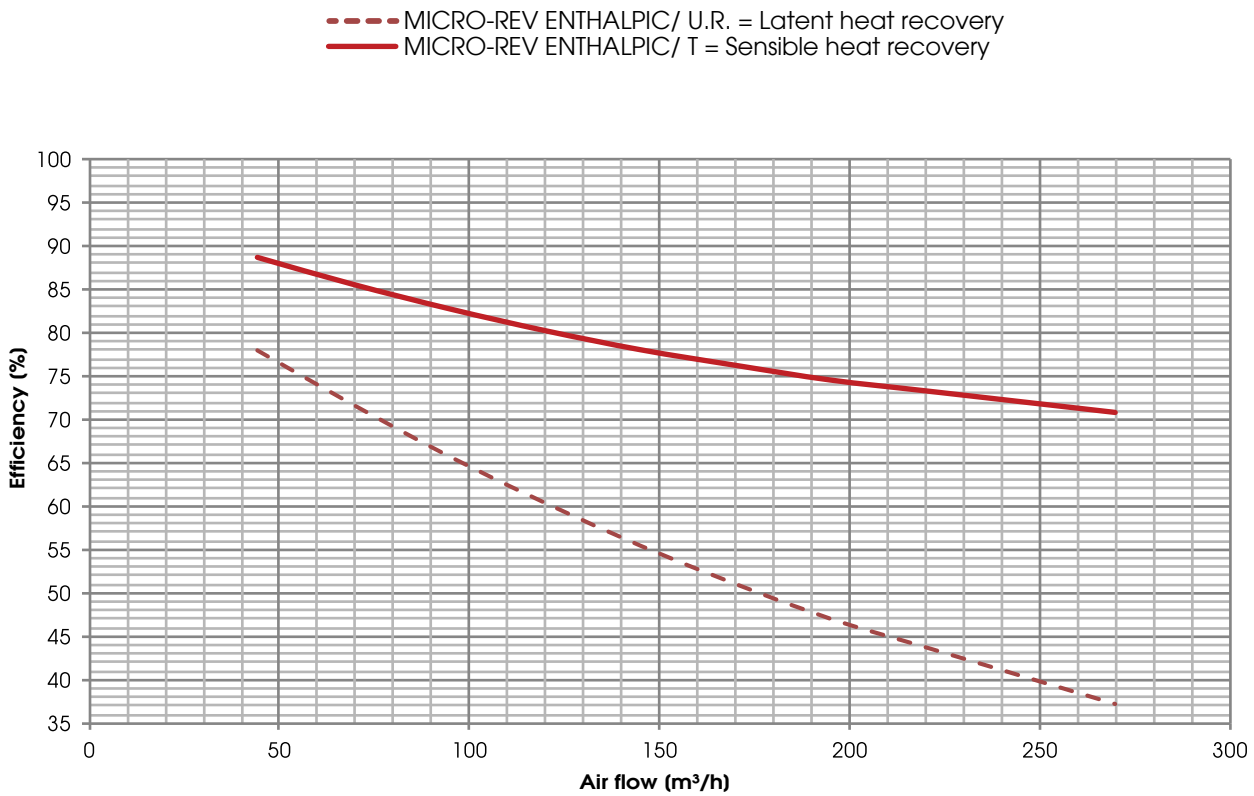

TEST LEAKAGE MICRO-REV/ENT according to UNI EN 13141-7

LEAKAGE	TEST LEAKAGE	CLASS
OUTDOOR	Positive pressure 250 Pa	A2
OUTDOOR	Negative pressure 250 Pa	A2
INDOOR	Pressure difference 100 Pa	A3

NOISE LEVEL MICRO-REV

Lw Sound power level taken in accordance to UNI EN ISO 3747 - CLASS 3

	NOISE FORM THE CASE (dB)							
Unit **MICRO-REV/ENT**	125 Hz	250 Hz	500 Hz	1000 Hz	2000 Hz	4000 Hz	8000 Hz	L_w dB(A)
MAX	56,2	62,4	59,7	53,6	44,7	43,0	45,0	60,1
REF	54,3	60,5	53,3	51,2	42,1	39,6	44,6	56,5

	NOISE IN THE DUCTS (dB)							
Unit **MICRO-REV/ENT**	125 Hz	250 Hz	500 Hz	1000 Hz	2000 Hz	4000 Hz	8000 Hz	L_w dB(A)
MAX	60,7	68,6	69,4	61,2	58,2	57,1	57,8	69,3
REF	56,1	65,2	57,7	54,5	48,3	47,5	48,6	61,0

ELECTRIAL DATA

MATCHING	FAN				UNIT MICRO-REV	
	Power*(W)	Supply	Max current(A)	Insulation class	Supply	Max current (A)
MICRO-REV/ENT	2 X 50	230 V, 50/60 Hz 1F	2 X 0,46	IP 44 class A	230 V, 50 Hz 1F	1,1

(*) Fan data, it's referred to the global absorbed power graph of the machine in the working point

DIMENSIONS (mm) WEIGHT (kg)

Weight: MICRO-REV : 35,6 kg

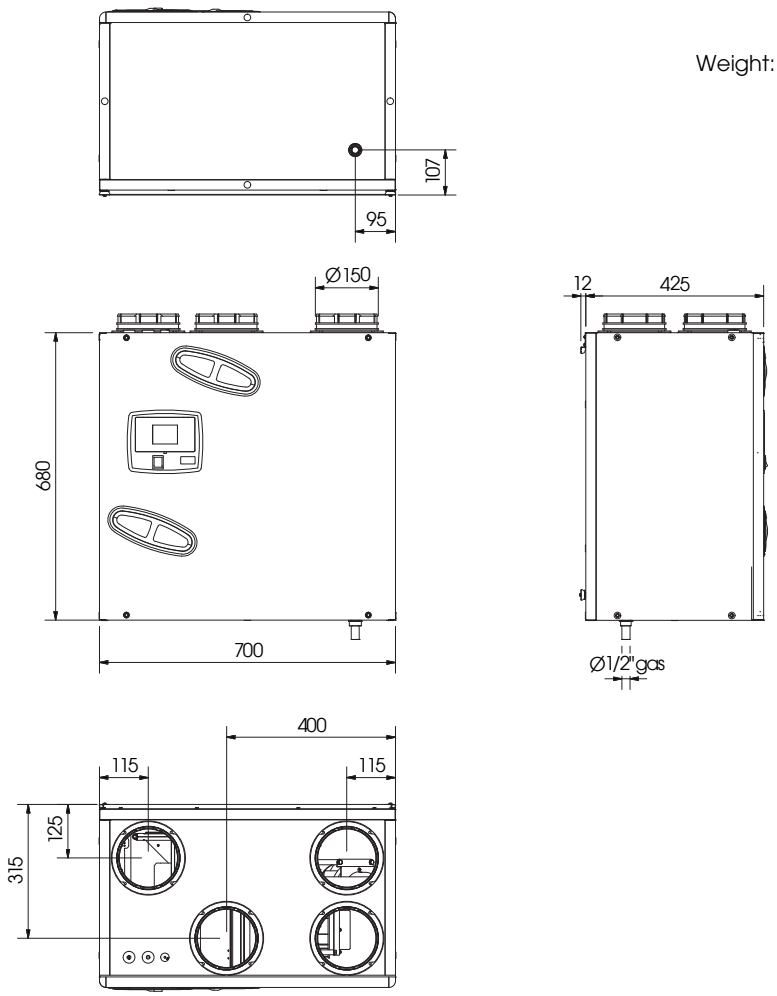

MICRO-REV INSTALLATION

WALL INSTALLATION

Minimum required space for maintenance (mm)

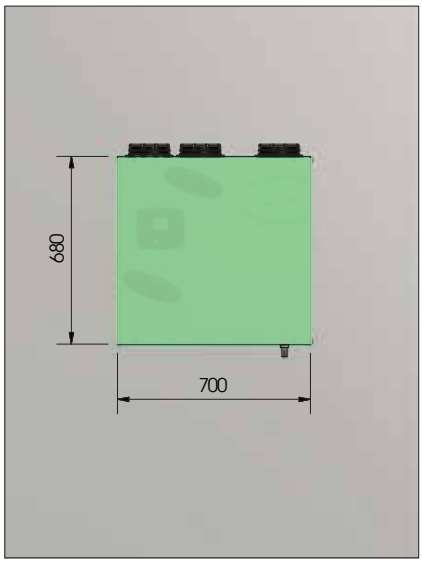

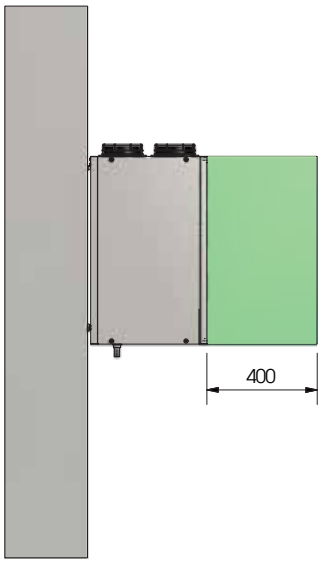

STANDARD SIPHON (mm)

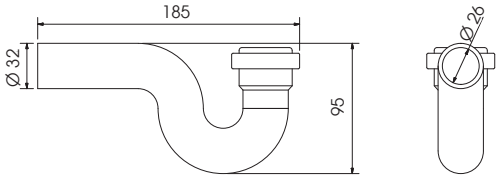

A	Manufacturer's name UTEK S.r.l					
B	Manufacturer's model identifier		MICRO-REV BP EVO-PH SV	MICRO-REV BP CTR-S SV	MICRO-REV ENT BP EVO-PH SV	MICRO-REV ENT BP CTR-S SV
C	Specific energy consumption (SEC) (kWh/m².a)	COLD	-72,2	-70,8	-67,9	-66,2
		AVERAGE	-35,2	-34,1	-32,9	-31,6
		WARM	-11,4	-10,4	-10,3	-9,1
	SEC class		A	A	B	B
D	Declared typology		UVR - UVB	UVR - UVB	UVR - UVB	UVR - UVB
E	Type of drive installed		Variable speed	Variable speed	Variable speed	Variable speed
F	Type of heat recovery system		Recuperative	Recuperative	Recuperative	Recuperative
G	Thermal efficiency of heat recovery (%)		84,5	84,5	77,5	77,5
H	Maximum flow rate (m³/s)		0,064	0,064	0,061	0,061
I	Electrical power input at maximum flow rate (W)		98	98	98	98
I	Sound power level (Lwa)(dB)		57	57	57	57
K	Reference flow rate (m³/s)		0,045	0,045	0,042	0,042
L	Reference pressure difference (Pa)		50	50	50	50
M	SPI (W/m³/h)		0,305	0,305	0,312	0,312
N	Control factor CLTR		0,95	1	0,95	1
	Control typology		Clock control (no DCV)	Manual control (no DCV)	Clock control (no DCV)	Manual control (no DCV)
O	Declared maximum internal / external leakage rates (%)		10,6 / 5,6	10,6 / 5,6	9,8 / 4,6	9,8 / 4,6
P	Mixing rate of non-ducted bidirectional ventilation units (%)		-	-	-	-
Q	Position and description of visual filter warning for RVUs intended for use with filters, including text pointing out the importance of regular filter changes for performance and energy efficiency of the unit		Filter warning is signaled on the display of the control system: the flashing writing "DirtyFilters" will appear. "To preserve the energy efficiency of the NRVU, it's recommended to replace the filters when signaled." Positioned near the filters inspection.			
R	For unidirectional ventilation systems, instructions to install regulated supply/exhaust grilles in the façade for natural air supply/extraction		-	-	-	-
S	Internet address for pre-/dis-assembly instructions					
T	For non-ducted units only: the airflow sensitivity to pressure variations at + 20 Pa and – 20 Pa		-	-	-	-
U	For non-ducted units only: the indoor/outdoor air tightness		-	-	-	-
V	The annual electricity consumption (AEC) (kWh/a)		390	430	398	436
W	The annual heating saved (AHS) for each type of climate (kWh/a)		2000 (WARM)	1990 (WARM)	1910 (WARM)	1890 (WARM)
			8670 (COLD)	8620 (COLD)	8250 (COLD)	8180 (COLD)
			4430 (AVERAGE)	4410 (AVERAGE)	4220 (AVERAGE)	4180 (AVERAGE)

Dear Customer

Thanks for your attention to the product UTEK , designed and manufactured to ensure the real values to the User: Quality, Safety and Savings on working.

Made in Italy

AZIENDA CON SISTEMA DI GESTIONE QUALITÀ CERTIFICATO DA DNV GL
ISO 9001

AZIENDA CON SISTEMA DI GESTIONE AMBIENTALE CERTIFICATO DA DNV
ISO 14001

the Dealer

MICRO-REV_2018_1_EN

CLA S.r.l. Via Nazionale,132 23036 San Giacomo di Teglio (So) Italy Tel.+39 0342 786116 | utek-air.it | cla-air.it