Utek

indoor air quality and energy saving

TECHNICAL DATA

UNIT	CONTROL	ENERGETIC CLASS
FLAT 1	CTR-S	B
	EVO(D)-PH	A
	EVO(D)-PH + probe	A
FLAT 2	CTR-S	B
	EVO(D)-PH	A
	EVO(D)-PH + probe	A
FLAT 1 ENT	EVO(D)-PH	B
	EVO(D)-PH + probe	A
FLAT 2 ENT	EVO(D)-PH	B
	EVO(D)-PH + probe	A
FLAT 3	CTR-S	A
	EVO(D)-PH	A
	EVO(D)-PH + probe	A
FLAT 4	CTR-S	B
	EVO(D)-PH	A
	EVO(D)-PH + probe	A
FLAT 3 ENT	CTR-S	B
	EVO(D)-PH	A
	EVO(D)-PH + probe	A
FLAT 4 ENT	CTR-S	B
	EVO(D)-PH	B
	EVO(D)-PH + probe	B
FLAT 5	CTR-S	B
	EVO(D)-PH	A
	EVO(D)-PH + probe	A
FLAT 5 ENT	CTR-S	B
	EVO(D)-PH	A
	EVO(D)-PH + probe	A

FLAT

HEAT RECOVERY VENTILATION UNITS for RESIDENTIAL BUILDINGS

FLAT
High efficiency heat recovery ventilation unit with double flow for residential buildings. There are 5 sizes.

EQUIPPED
It is equipped with an aluminum counterflow heat exchanger (Eurovent® certified). EC backward curved centrifugal fans allow the FLAT to reach a maximum capacity of about: 140 m³/h at 100 Pa (FLAT 1) with 62 Watt power consumption, 220 m³/h at 100 Pa (FLAT 2) with 97 Watt power consumption, 414 m³/h at 100 Pa (FLAT 3) with 161 Watt power consumption, 582 m³/h at 100 Pa (FLAT 4) with 339 Watt power consumption and 933 m3/h at 100 Pa (FLAT 5) with 350 Watt power consumption . The unit includes the total by-pass, which permits to take advantage of favorable climatic conditions outside the building for automatic free cooling (or free heating).

STRUCTURE
The FLAT is realized with a self-supporting casing made by panels, thickness 22 mm, sandwiched on injected polyurethane foam insulation. The casing and the internal parts are realized in zinc magnesium, material with a high resistance to corrosion and an outside attractive appearance.

A hinge-opening panel makes easy the filters replacement Coarse 65% (G4) for fresh air and Coarse 65% (G4) for exhaust air. The FLAT can be installed in ambient with temperature between 0° C and 45° C, can have floor or ceiling installation (for size 3, 4 and 5 the machine must not be turned upside down)

CONTROLS
The FLAT is supplied with control system and easy connection to the power supply. It's also available the versions with simplified CTR08-PH control, the version with EVO-PH control and the version with EVOD-PH-IP control ready for integration in home automation systems (Modbus protocol with Ethernet connection or, upon request , with the addition of the RS485 connection).

For a more complete view of the characteristics of the control panels, please read the specific manuals

Counterflow heat exchanger made of aluminum manufactured by RECUTECH. RECUTECH participates in the Eurovent Certification Program

STANDARD Configuration FLAT 1 and 2

STANDARD Configuration FLAT 3 and 4

MIRRORED Configuration FLAT 1 and 2

MIRRORED Configuration FLAT 3 and 4

STANDARD Configuration FLAT 5

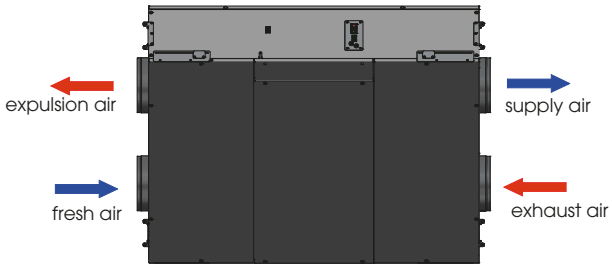

MIRRORED Configuration FLAT 5

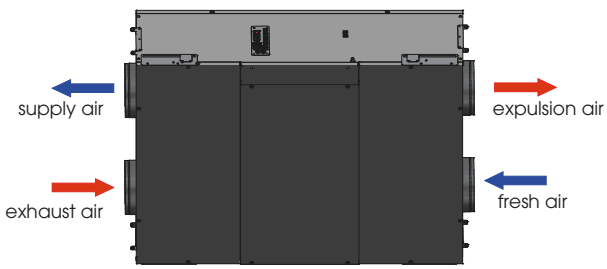

PERFORMANCES (UNI EN 13141-7)

The unit must be ducted properly: UTEK authorizes the use only according to its performance diagram shown into this catalogue

The declared performances are with CLEAN filters, and guaranteed ONLY with the original filters UTEK low pressure drop.

FLAT 1

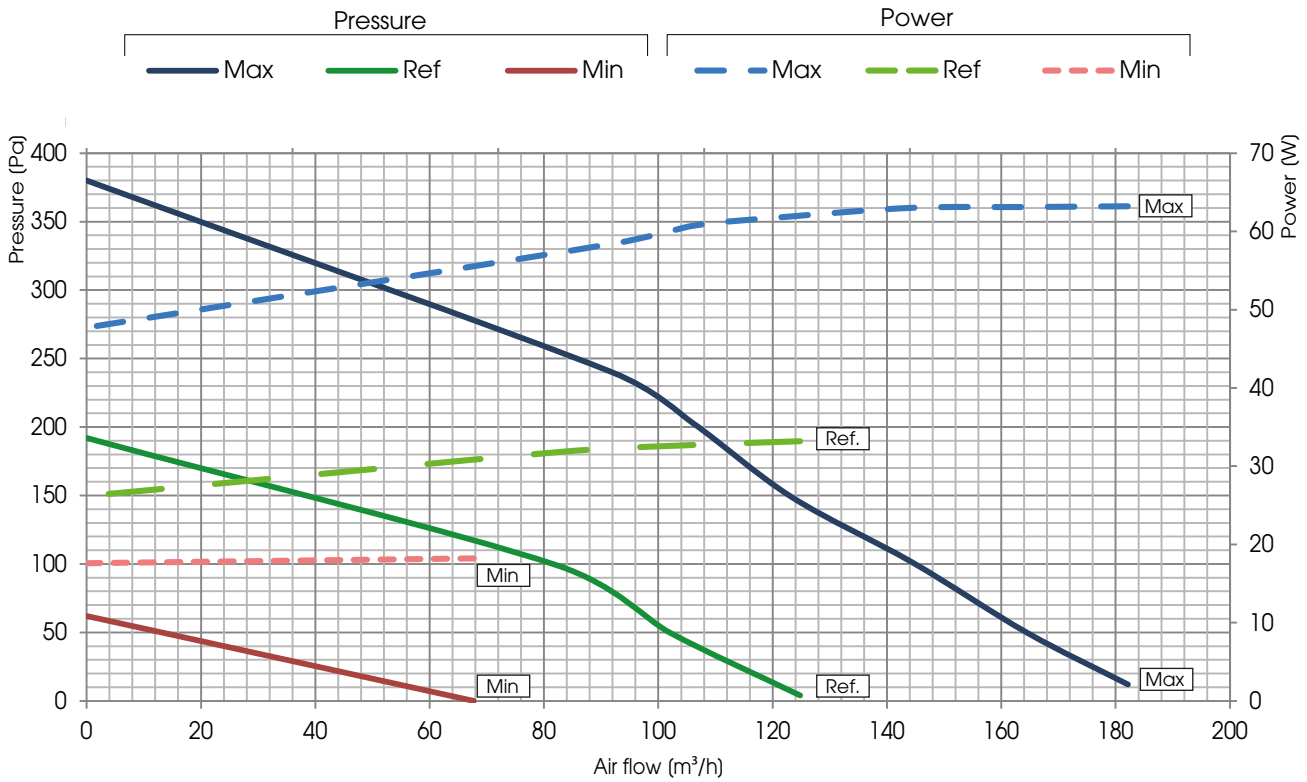

FLAT 2

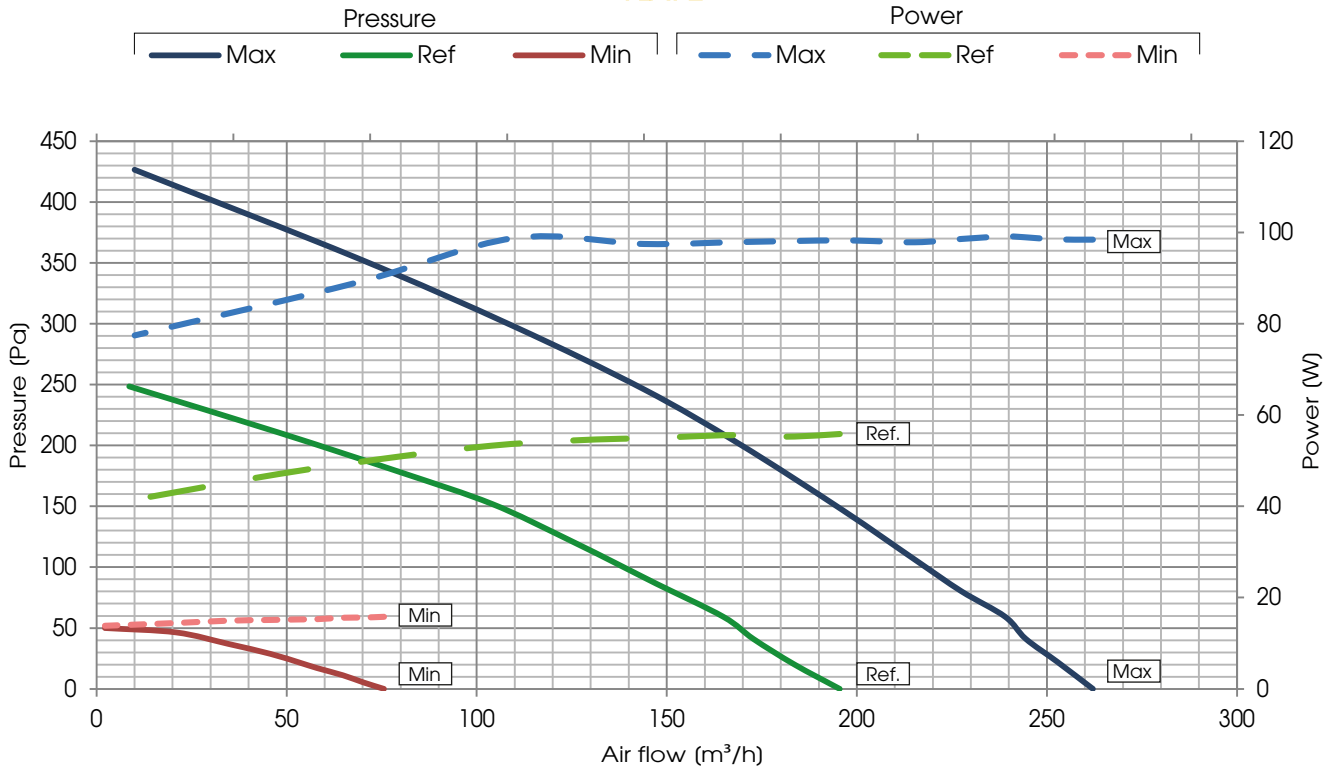

PERFORMANCES (UNI EN 13141-7)

The unit must be ducted properly: UTEK authorizes the use only according to its performance diagram shown into this catalogue

The declared performances are with CLEAN filters, and guaranteed ONLY with the original filters UTEK low pressure drop.

FLAT 3

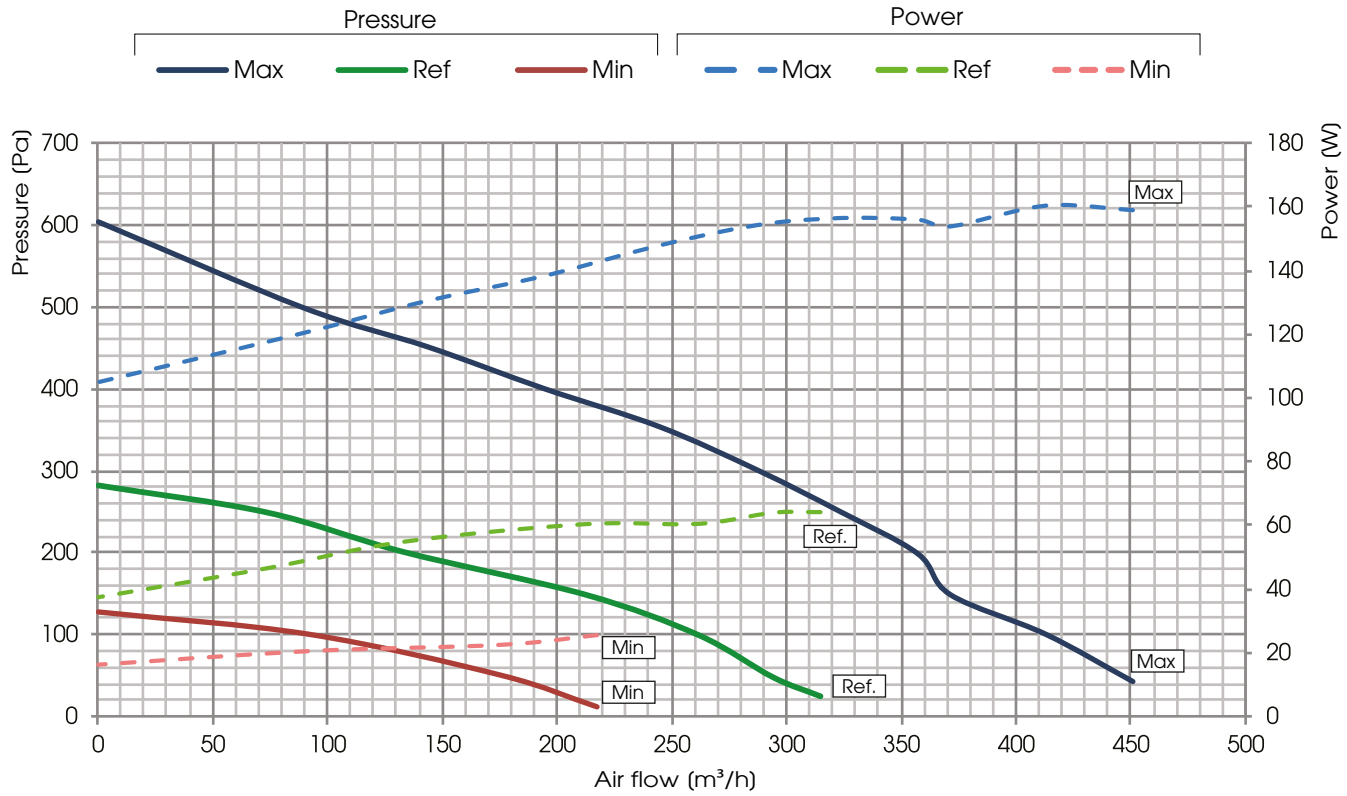

FLAT 4

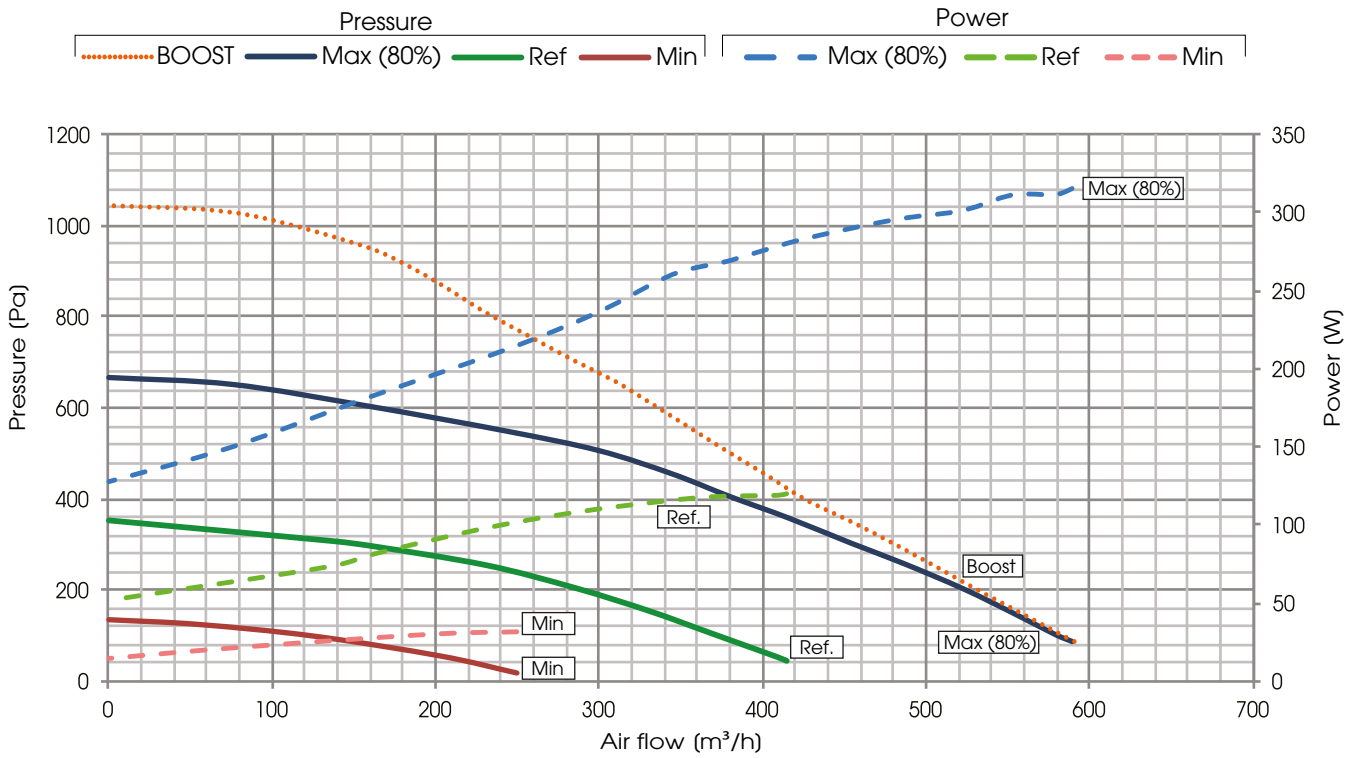

PERFORMANCES (UNI EN 13141-7)

The unit must be ducted properly: UTEK authorizes the use only according to its performance diagram shown into this catalogue

The declared performances are with CLEAN filters, and guaranteed ONLY with the original filters UTEK low pressure drop.

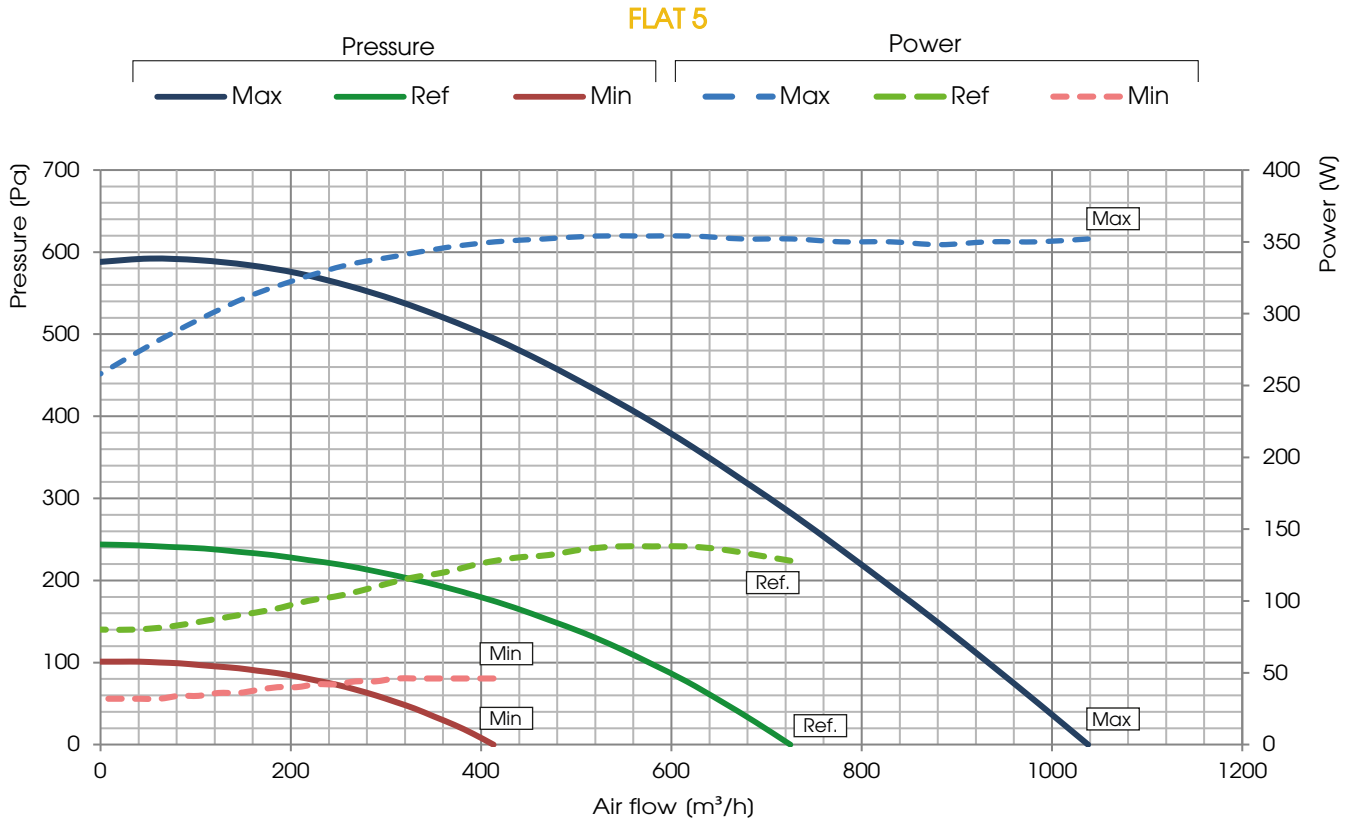

HEAT RECOVERY PERFORMANCE (sensible efficiency)

Values refered to the following conditions (UNI EN 13141-7): Tbs external air 7°C; U.R. esternal 72%; Tbs enviorment 20°C; U.R. enviorment 38%

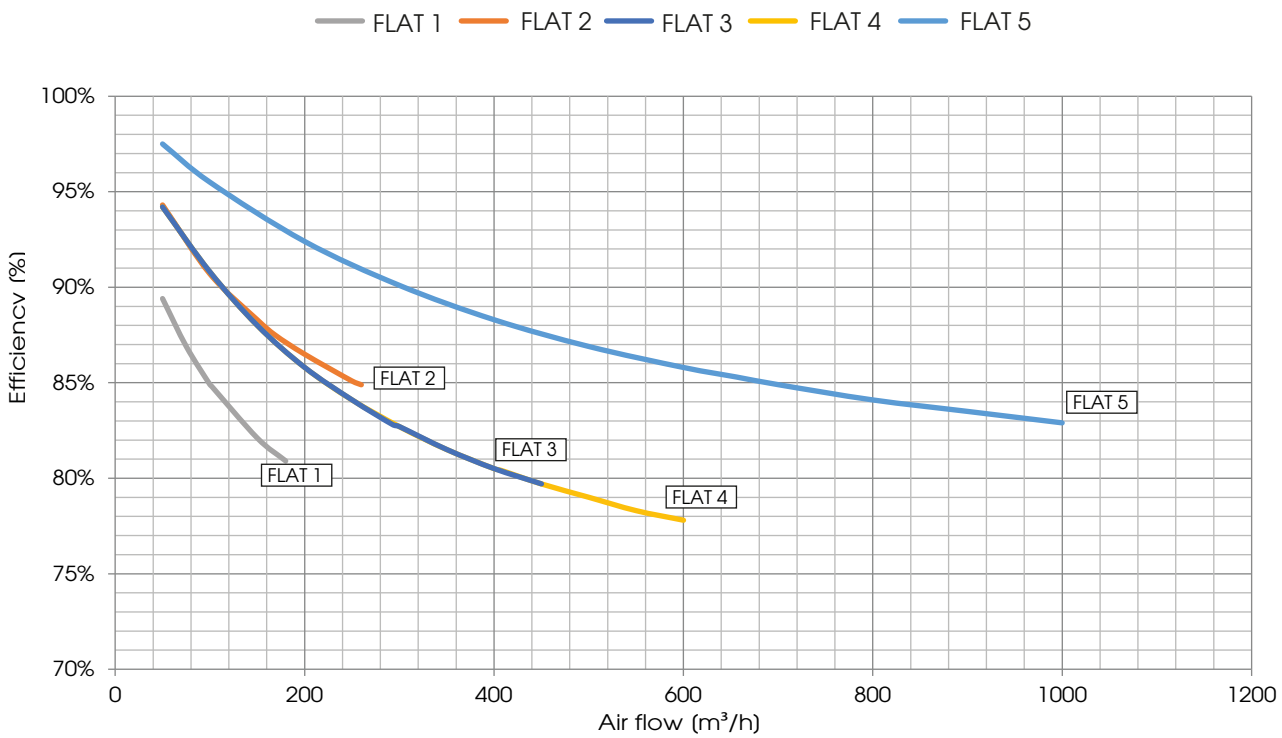

HEAT RECOVERY PERFORMANCE SENSIBLE AND LATENT

Values refered to the following conditions (UNI EN 13141-7): Tbs external air 7°C; U.R. esternal 72%; Tbs enviorment 20°C; U.R. enviorment e38%

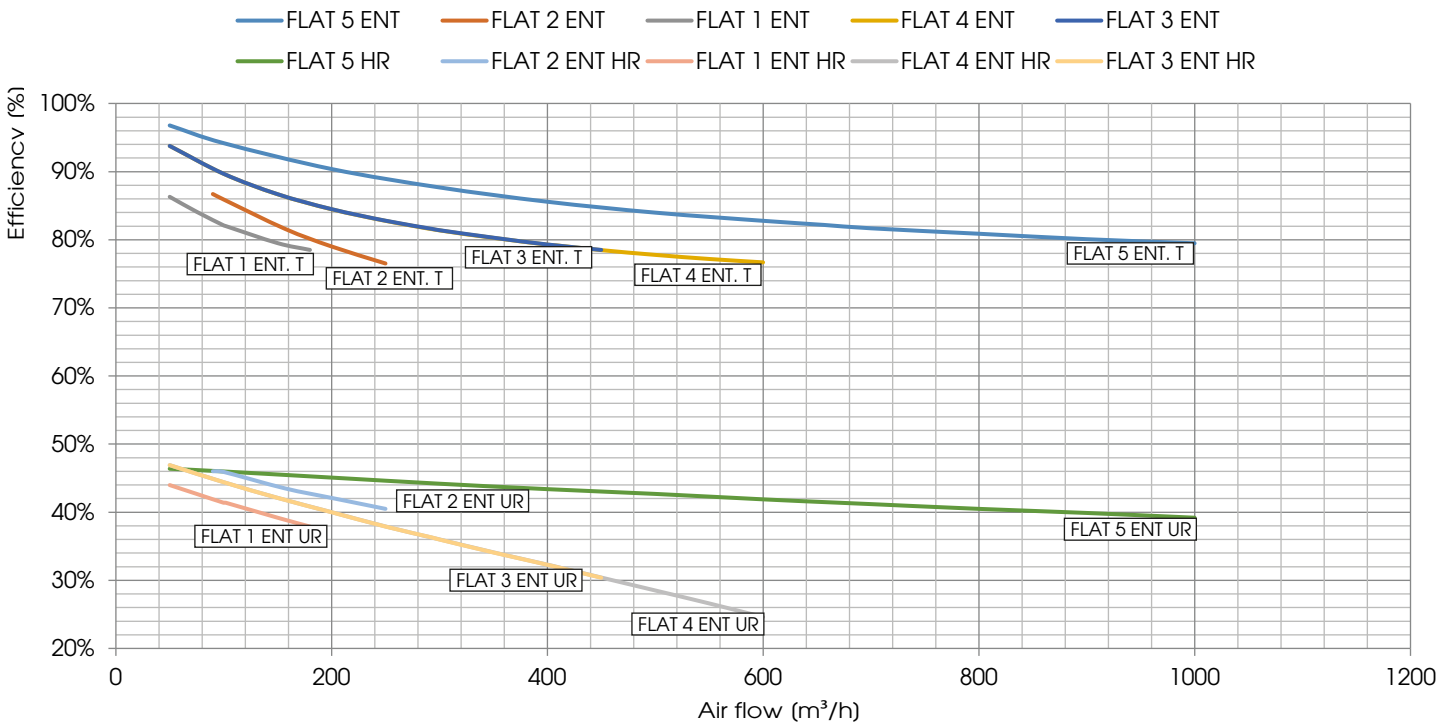

TEST LEAKAGE FLAT according UNI EN 13141-7

LEAKAGE	TEST CONDITIONS	FLAT 1 CLASS	FLAT 2 CLASS	FLAT 3 CLASS	FLAT 4 CLASS	FLAT 5 CLASS
OUTDOOR	Positive pression 250 Pa	A2	A1	A1	A1	A1
OUTDOOR	Negative pression 250 Pa	A2	A1	A1	A1	A1
INDOOR	Pressure difference100 Pa	A2	A1	A2	A2	A2

NOISE LEVEL

Lw Sound power level taken in accordance to UNI EN ISO 3747 CLASS 3 (FLAT 1, 3, 4) and UNI EN ISO 3741 CLASS 1 (FLAT 2 - tested BRE)

	NOISE FROM THE CASE (dB)							
Unit **FLAT 1/ENT**	125 Hz	250 Hz	500 Hz	1000 Hz	2000 Hz	4000 Hz	8000 Hz	L_w dB(A)
MAX	50,9	62,6	59,5	48,2	41,5	34,9	38,6	58,9
REF	52,4	58,5	52,1	41,2	35,9	32,3	40,3	53,2

	NOISE IN THE DUCTS (dB)							
Unit **FLAT 1/ENT**	125 Hz	250 Hz	500 Hz	1000 Hz	2000 Hz	4000 Hz	8000 Hz	L_w dB(A)
MAX	59,2	65,5	68,5	56,5	53,5	54,4	58,3	67,4
REF	54,0	65,2	61,5	47,9	43,7	43,4	44,0	61,1

	NOISE FROM THE CASE (dB)								
Unit **FLAT 2/ENT**	63 Hz	125 Hz	250 Hz	500 Hz	1000 Hz	2000 Hz	4000 Hz	8000 Hz	L_w dB(A)
MAX	49,4	49,1	55,9	63,6	54,4	50,6	41,7	26,4	62,0
	55,8	44,9	53,6	53,6	49,5	43,6	33,2	20,8	53,7

	NOISE IN THE DUCTS (dB)								
Unit **FLAT 2/ENT**	63 Hz	125 Hz	250 Hz	500 Hz	1000 Hz	2000 Hz	4000 Hz	8000 Hz	L_w dB(A)
MAX	59,8	61,6	64,4	74,0	59,5	60,1	59,6	49,7	72,1
REF	57,9	56,0	61,5	67,8	53,4	54,1	51,5	41,2	65,2

	NOISE FROM THE CASE (dB)							
Unit **FLAT 3/ENT**	125 Hz	250 Hz	500 Hz	1000 Hz	2000 Hz	4000 Hz	8000 Hz	L_w dB(A)
MAX	62,6	66,9	69,6	49,4	48,6	42,9	45,9	67,3
REF	55,6	63,0	56,9	47,2	41,8	35,2	41,1	57,8

	NOISE IN THE DUCTS (dB)							
Unit **FLAT 3/ENT**	125 Hz	250 Hz	500 Hz	1000 Hz	2000 Hz	4000 Hz	8000 Hz	L_w dB(A)
MAX	62,1	69,9	72,9	60,6	58,6	59,1	67,7	72,7
REF	58,9	66,0	66,6	56,6	54,8	53,3	59,4	66,6

	NOISE FROM THE CASE (dB)							
Unit **FLAT 4/ENT**	125 Hz	250 Hz	500 Hz	1000 Hz	2000 Hz	4000 Hz	8000 Hz	L_w dB(A)
MAX	62,2	69,7	73,2	54,4	51,2	46,5	44,1	70,7
REF	56,1	69,2	62,8	49,7	44,8	40,3	42,5	63,5

	NOISE IN THE DUCTS (dB)							
Unit **FLAT 4/ENT**	125 Hz	250 Hz	500 Hz	1000 Hz	2000 Hz	4000 Hz	8000 Hz	L_w dB(A)
MAX	70,6	76,5	79,8	68,8	65,5	65,7	70,7	78,9
REF	64,8	75,5	69,9	60,2	58,6	58,0	61,8	71,4

	NOISE FROM THE CASE (dB)							
Unità **FLAT 5/ENT**	125 Hz	250 Hz	500 Hz	1000 Hz	2000 Hz	4000 Hz	8000 Hz	L_w dB(A)
MAX	69,9	71,7	58,9	52,1	48,6	41,5	38,3	64,7
REF	60,1	67,0	51,5	45,3	39,7	33,8	28,9	59,2

	NOISE IN THE DUCTS (dB)							
Unità **FLAT 5/ENT**	125 Hz	250 Hz	500 Hz	1000 Hz	2000 Hz	4000 Hz	8000 Hz	L_w dB(A)
MAX	72,4	73,6	75,4	67,2	66,6	62,6	60,8	75,4
REF	63,3	69,0	68,1	57,7	56,3	51,5	47,2	67,5

ELECTRICAL DATA

UNIT	FAN				UNIT FLAT/ENT	
	Power (W)	Supply	Courrent max.(A)	Insulation class	Supply	Courrent max.(A)
FLAT 1/ENT	2 X 27	230 V, 50/60 Hz 1F	2 X 0,27	IP 44 class B	230 V, 50 Hz 1F	0,6
FLAT 2/ENT	2 X 50	230 V, 50/60 Hz 1F	2 X 0,46	IP 44 class B	230 V, 50 Hz 1F	1,1
FLAT 3/ENT	2 X 85	230 V, 50/60 Hz 1F	2 X 0,75	IP 54, class B	230 V, 50 Hz 1F	1,6
FLAT 4/ENT	2 X 170	230 V, 50/60 Hz 1F	2 X 1,65	IP 54, class B	230 V, 50 Hz 1F	3,5
FLAT 5/ENT	2 X 170	230 V, 50/60 Hz 1F	2 X 1,35	IP 54, class B	230 V, 50 Hz 1F	2,9

(*) Fan data, it's referred to the global absorbed power graph of the machine in the working point

FLAT 1 and 2

DIMENSIONS (mm) WEIGHT(kg)

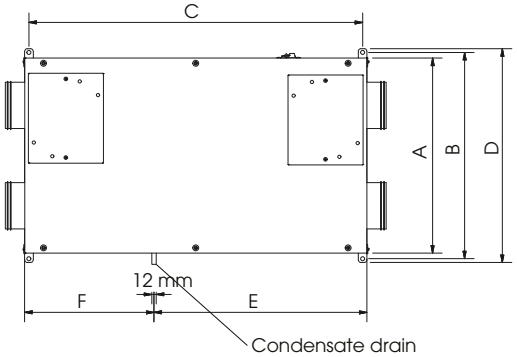

UNIT	A	B	C	D	E	F	G	H	I	L
FLAT 1	520	550	890	570	568	345	913	258	32	29
FLAT 2	580	610	1211	630	858	376	1234	258	32	29

Weight FLAT 1 = 31 kg
Weight FLAT 2 = 42 kg

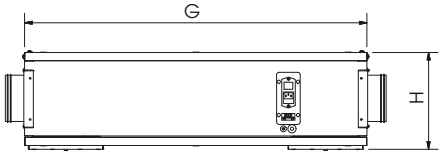

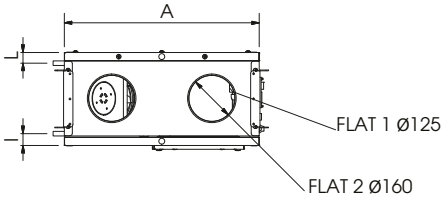

FLAT 3 and 4

DIMENSIONS (mm) WEIGHT (kg)

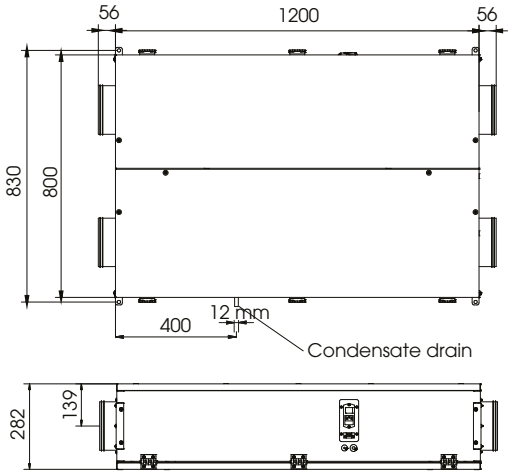

Weight FLAT 3 = 60 kg
Weight FLAT 4 = 61 kg

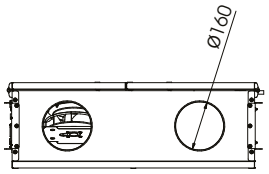

FLAT 5

DIMENSIONS (mm) WEIGHT (kg)

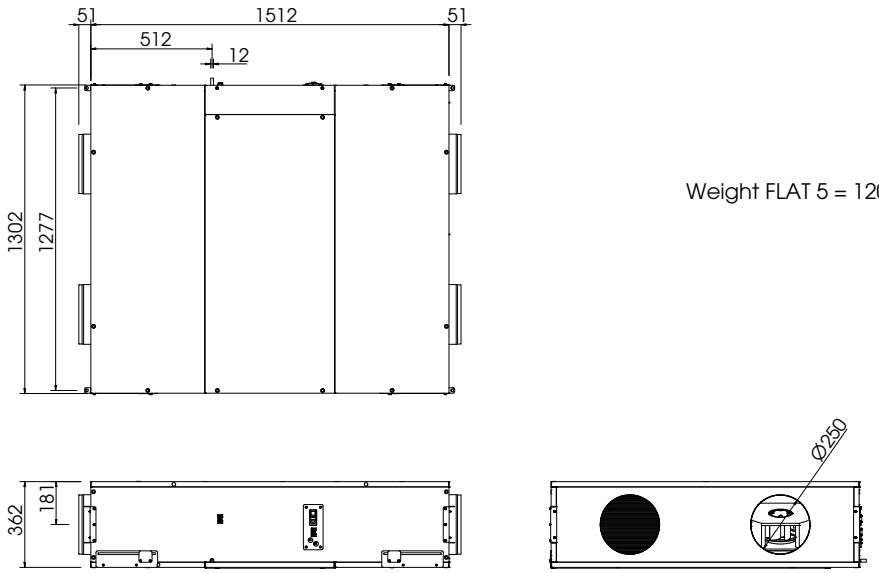

Weight FLAT 5 = 120 kg

INSTALLATION FLAT 1 and 2

FLOOR INSTALLATION

Minimum required space for maintenance (mm)

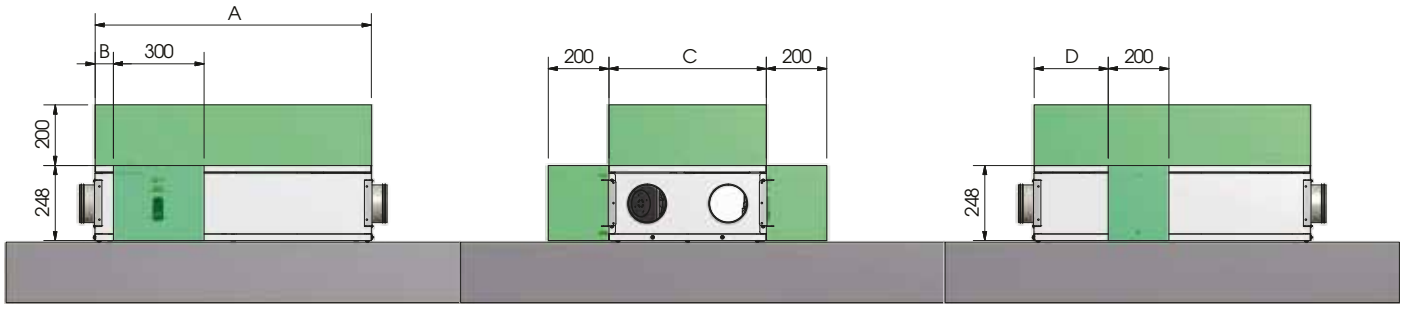

UNIT	A (mm)	B (mm)	C (mm)	D (mm)
FLAT 1	912	60	520	245
FLAT 2	1234	0	580	275

INSTALLATION FLAT 1 and 2

CEILING INSTALLATION

Minimum required space for maintenance (mm)

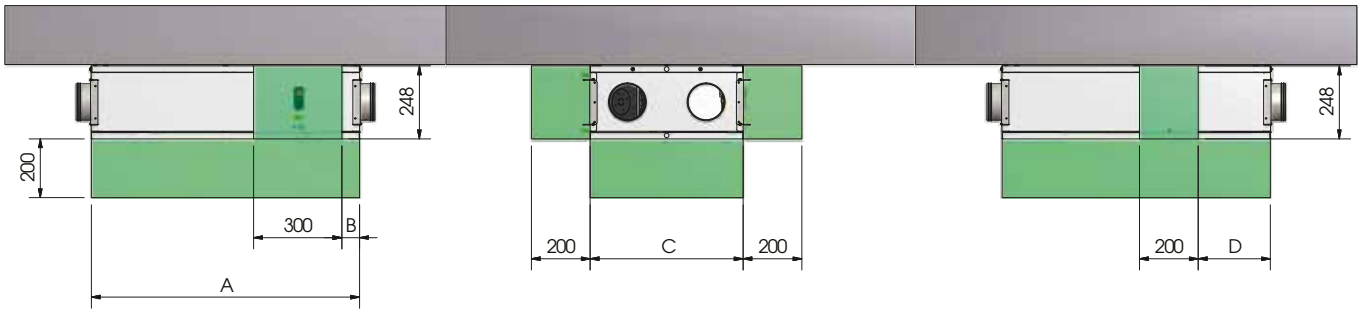

UNIT	A (mm)	B (mm)	C (mm)	D (mm)
FLAT 1	912	60	520	245
FLAT 2	1234	0	580	275

INSTALLATION FLAT 3 and 4

FLOOR INSTALLATION

Minimum required space for maintenance (mm)

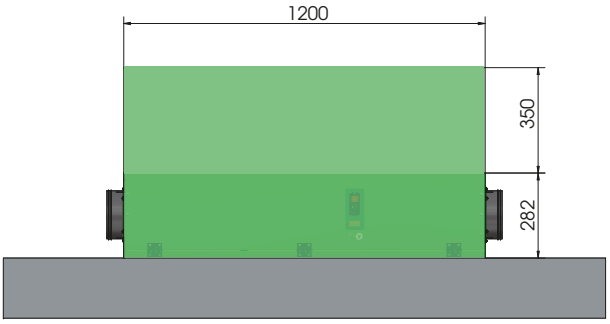

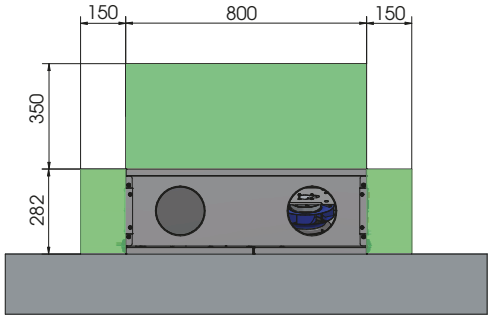

NOTES: For sizes 3 and 4 the machine must not be turned upside down

CEILING INSTALLATION

Minimum required space for maintenance (mm)

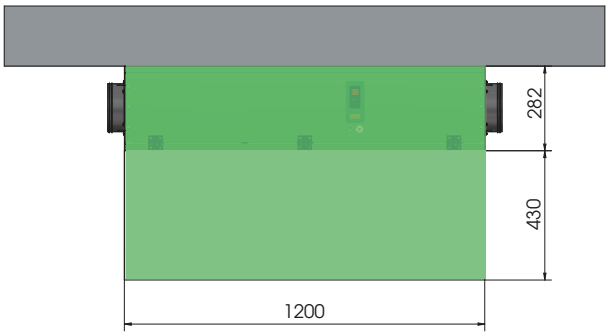

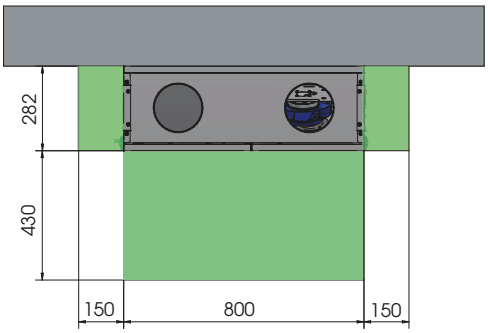

NOTES: For sizes 3 and 4 the machine must not be turned upside down

INSTALLATION FLAT 5

CEILING INSTALLATION

Minimum required space for maintenance (mm)

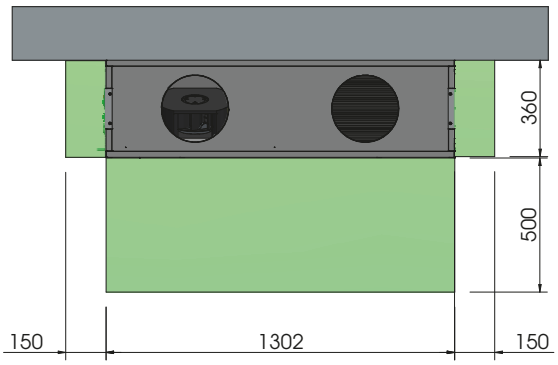

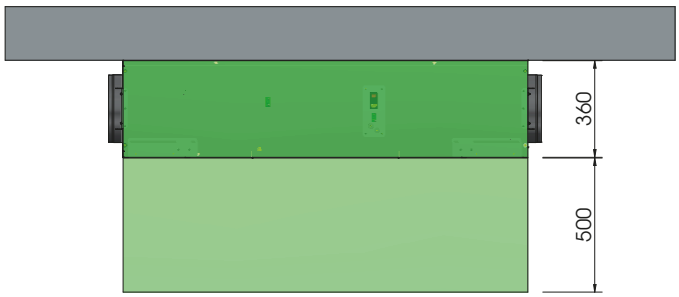

Electrical resistance

PRE-HEATING ELECTRIC RESISTANCE DATA				
Model	Supply	Power (kW)	Courrent (A)	No. of stages
FLAT 1/2	230V, 50Hz,1F	0,5	2,2	1
FLAT 3/4	230V, 50Hz,1F	1,0	4,4	1
FLAT 5	230V, 50Hz,1F	1,5	6,5	1

N.B. - for POST treatment batteries see the Tecno-price list ACCESSORIES

A	Manufacturer's name C.L.A. S.r.l					
B	Manufacturer's model identifier		FLAT 1 BP EVO-PH SH	FLAT 1 BP CTR-S SH	FLAT 2 BP EVO-PH SH	FLAT 2 BP CTR-S SH
C	Specific energy consumption (SEC) ($kWh/m^2.a$)	COLD	-72,0	-70,6	-70,6	-69,0
		TEMPERATE	-34,9	-33,7	-34,1	-32,8
		WARM	-11,0	-10,0	-10,5	-9,4
	SEC class		A	B	A	B
D	Declared typology		UVR - UVB	UVR - UVB	UVR - UVB	UVR - UVB
E	Type of drive installed		Variable speed	Variable speed	Variable speed	Variable speed
F	Type of heat recovery system		Recovery	Recovery	Recovery	Recovery
G	Thermal efficiency of heat recovery (%)		84,8	84,8	82,8	82,8
H	Maximum flow rate (m^3/s)		0,040	0,040	0,061	0,061
I	Electrical power input at maximum flow rate (W)		63	63	98	98
I	Sound power level (Lwa) (dB)		53	52	54	54
K	Reference flow rate (m^3/s)		0,028	0,028	0,047	0,047
L	Reference pressure difference (Pa)		50	50	50	50
M	SPI ($W/m^3/h$)		0,323	0,323	0,328	0,328
N	Control factor CLTR		0,95	1	0,95	1
	Control typology		Timer control (no DCV)	Manual control (no DCV)	Timer control (no DCV)	Manual control (no DCV)
O	Declared maximum internal / external leakage rates (%)		3.9 / 5.9	3.9 / 5.9	1.7 / 2.6	1.7 / 2.6
P	Mixing rate of non-ducted bidirectional ventilation units (%)		-	-	-	-
Q	Position and description of visual filter warning for RVUs intended for use with filters, including text pointing out the importance of regular filter changes for performance and energy efficiency of the unit		The filter alarm is signaled on the Control System display: the intermittent "Dirty Filters" message will appear. "To maintain the energy efficiency of the UVR, it is recommended to replace the filters when reported." The writing is positioned near the filter inspection.			
R	For unidirectional ventilation systems, instructions to install regulated supply/exhaust grilles in the façade for natural air supply/extraction		-			
S	Internet address for pre-/dis-assembly instructions		www.utek-air.it			
T	For non-ducted units only: the airflow sensitivity to pressure variations at + 20 Pa and – 20 Pa		-			
U	For non-ducted units only: the indoor/outdoor air tightness		-			
V	The annual electricity consumption (AEC) (kWh/a)		410	450	420	460
W	The annual heating saved (AHS) for each type of climate (kWh/a)		2010 (WARM)	2000 (WARM)	1980 (WARM)	1970 (WARM)
			8690 (COLD)	8640 (COLD)	8570 (COLD)	8510 (COLD)
			4440 (TEMPERATE)	4420 (TEMPERATE)	4380 (TEMPERATE)	4350 (TEMPERATE)

A	Manufacturer's name C.L.A. S.r.l					
B	Manufacturer's model identifier		FLAT 1/ENT BP EVO-PH SH	FLAT 2/ENT BP EVO-PH SH	FLAT 3 BP EVO-PH SH	FLAT 3 BP CTR-S SH
C	Specific energy consumption (SEC) (kWh/m².a)	COLD	-68,5	-69,2	-73,7	-72,5
		TEMPERATE	-33,1	-33,0	-37,2	-36,3
		WARM	-10,2	-9,7	-13,7	-12,9
	SEC class		B	B	A	A
D	Declared typology		UVR - UVB	UVR - UVB	UVR - UVB	UVR - UVB
E	Type of drive installed		Variable speed	Variable speed	Variable speed	Variable speed
F	Type of heat recovery system		Recovery	Recovery	Recovery	Recovery
G	Thermal efficiency of heat recovery (%)		79,1	81,6	82,8	82,8
H	Maximum flow rate (m³/s)		0,039	0,056	0,125	0,125
I	Electrical power input at maximum flow rate (W)		63	98	170	170
I	Sound power level (Lwa) (dB)		53	54	58	58
K	Reference flow rate (m³/s)		0,028	0,044	0,081	0,081
L	Reference pressure difference (Pa)		50	50	50	50
M	SPI (W/m³/h)		0,323	0,353	0,217	0,217
N	Control factor CLTR		0,95	0,95	0,95	1
	Control typology		Clock control (no DCV)	Clock control (no DCV)	Clock control (no DCV)	Manual control (no DCV)
O	Declared maximum internal / external leakage rates (%)		4.0 / 5.9	1.8 / 2.8	7.2 / 2.4	7.2 / 2.4
P	Mixing rate of non-ducted bidirectional ventilation units (%)		-	-	-	-
Q	Position and description of visual filter warning for RVUs intended for use with filters, including text pointing out the importance of regular filter changes for performance and energy efficiency of the unit		The filter alarm is signaled on the Control System display: the intermittent "Dirty Filters" message will appear. "To maintain the energy efficiency of the UVR, it is recommended to replace the filters when reported." The writing is positioned near the filter inspection.			
R	For unidirectional ventilation systems, instructions to install regulated supply/exhaust grilles in the façade for natural air supply/extraction					
S	Internet address for pre-/dis-assembly instructions		www.utek-air.it			
T	For non-ducted units only: the airflow sensitivity to pressure variations at + 20 Pa and – 20 Pa					
U	For non-ducted units only: the indoor/outdoor air tightness					
V	The annual electricity consumption (AEC) (kWh/a)		410	440	291	317
W	The annual heating saved (AHS) for each type of climate (kWh/a)		1930 (WARM)	1960 (WARM)	1981 (WARM)	1968 (WARM)
			8350 (COLD)	8500 (COLD)	8568 (COLD)	8515 (COLD)
			4270 (TEMPERATE)	4340 (TEMPERATE)	4380 (TEMPERATE)	4353 (TEMPERATE)

A	Manufacturer's name C.L.A. S.r.l					
B	Manufacturer's model identifier		FLAT 4 BP EVO-PH SH	FLAT 4 BP CTR-S SH	FLAT 4 ENT BP EVO-PH SH	FLAT 4 ENT BP EVO-PH SH
C	Specific energy consumption (SEC) ($kWh/m^2.a$)	COLD	-70,2	-68,8	-68,0	-63,6
		TEMPERATE	-34,4	-33,2	-34,3	-31,0
		WARM	-11,3	-10,3	-12,3	-9,7
	SEC class		A	B	A	B
D	Declared typology		UVR - UVB	UVR - UVB	UVR - UVB	UVR - UVB
E	Type of drive installed		Variable speed	Variable speed	Variable speed	Variable speed
F	Type of heat recovery system		Recovery	Recovery	Recovery	Recovery
G	Thermal efficiency of heat recovery (%)		80,4	80,4	73,2	69,3
H	Maximum flow rate (m^3/s)		0,164	0,164	0,125	0,164
I	Electrical power input at maximum flow rate (W)		340	340	170	340
I	Sound power level (Lwa) (dB)		63	63	58	63
K	Reference flow rate (m^3/s)		0,114	0,114	0,081	0,113
L	Reference pressure difference (Pa)		50	50	50	50
M	SPI ($W/m^3/h$)		0,29	0,29	0,218	0,291
N	Control factor CLTR		0,95	1	0,95	0,95
	Control typology		Clock control (no DCV)	Manual control (no DCV)	Clock control (no DCV)	Clock control (no DCV)
O	Declared maximum internal / external leakage rates (%)		5.1 / 1.7	5.1 / 1.7	7.2 / 2.4	5.1 / 1.7
P	Mixing rate of non-ducted bidirectional ventilation units (%)		-	-	-	-
Q	Position and description of visual filter warning for RVUs intended for use with filters, including text pointing out the importance of regular filter changes for performance and energy efficiency of the unit		The filter alarm is signaled on the Control System display: the intermittent "Dirty Filters" message will appear. "To maintain the energy efficiency of the UVR, it is recommended to replace the filters when reported." The writing is positioned near the filter inspection.			
R	For unidirectional ventilation systems, instructions to install regulated supply/exhaust grilles in the façade for natural air supply/extraction					
S	Internet address for pre-/dis-assembly instructions					
T	For non-ducted units only: the airflow sensitivity to pressure variations at + 20 Pa and – 20 Pa					
U	For non-ducted units only: the indoor/outdoor air tightness					
V	The annual electricity consumption (AEC) (kWh/a)		373	408	291	374
W	The annual heating saved (AHS) for each type of climate (kWh/a)		1948 (WARM)	1934 (WARM)	1849 (WARM)	1796 (WARM)
			8426 (COLD)	8365 (COLD)	8000 (COLD)	7769 (COLD)
			4307 (TEMPERATE)	4276 (TEMPERATE)	4090 (TEMPERATE)	3971 (TEMPERATE)

A	Manufacturer's name C.L.A. S.r.l					
B	Manufacturer's model identifier		FLAT 5 BP EVO-PH SH	FLAT 5 BP CTR-S SH	FLAT 5 ENT BP EVO-PH SH	FLAT 5 ENT BP EVO-PH SH
C	Specific energy consumption (SEC) (kWh/m².a)	COLD	-75,7	-74,4	-73,7	-72,5
		TEMPERATE	-38,3	-37,4	-37,3	-36,4
		WARM	-14,3	-13,6	-13,9	-13,1
	SEC class		A	A	A	A
D	Declared typology		UVR - UVB	UVR - UVB	UVR - UVB	UVR - UVB
E	Type of drive installed		Variable speed	Velocità variabile	Velocità variabile	Velocità variabile
F	Type of heat recovery system		Recovery	A recupero	A recupero	A recupero
G	Thermal efficiency of heat recovery (%)		85,3	85,3	82,2	82,2
H	Maximum flow rate (m³/s)		0,259	0,259	0,259	0,259
I	Electrical power input at maximum flow rate (W)		350	350	350	350
I	Sound power level (Lwa) (dB)		59	59	59	59
K	Reference flow rate (m³/s)		0,182	0,182	0,182	0,182
L	Reference pressure difference (Pa)		50	50	50	50
M	SPI (W/m³/h)		0,207	0,207	0,207	0,207
N	Control factor CLTR		0,95	1	0,95	1
	Control typology		Clock control (no DCV)	Comando manuale (senza DCV)	Comando a temporizzatore (senza DCV)	Comando a temporizzatore (senza DCV)
O	Declared maximum internal / external leakage rates (%)		6.4 / 2.1	6.4 / 2.1	6.4 / 2.1	6.4 / 2.1
P	Mixing rate of non-ducted bidirectional ventilation units (%)			-	-	-
Q	Position and description of visual filter warning for RVUs intended for use with filters, including text pointing out the importance of regular filter changes for performance and energy efficiency of the unit		The filter alarm is signaled on the Control System display: the intermittent "Dirty Filters" message will appear. "To maintain the energy efficiency of the UVR, it is recommended to replcice the filters when reported." The writing is positioned near the filter inspection.			
R	For unidirectional ventilation systems, instructions to install regulated supply/exhaust grilles in the façade for natural air supply/extraction					
S	Internet address for pre-/dis-assembly instructions					
T	For non-ducted units only: the airflow sensitivity to pressure variations at + 20 Pa and – 20 Pa					
U	For non-ducted units only: the indoor/outdoor air tightness					
V	The annual electricity consumption (AEC) (kWh/a)		278	304	278	304
W	The annual heating saved (AHS) for each type of climate (kWh/a)		2015 (WARM)	2004 (CALDO)	1972 (CALDO)	1960 (CALDO)
			8716 (COLD)	8671 (FREDDO)	8533 (FREDDO)	8477 (FREDDO)
			4456 (TEMPERATE)	4432 (TEMPERATO)	4362 (TEMPERATO)	4333 (TEMPERATO)

Dear Customer

Thanks for your attention to the product UTEK , designed and manufactured to ensure the real values to the User: Quality, Safety and Savings on working.

Made in Italy

AZIENDA CON SISTEMA DI GESTIONE QUALITÀ CERTIFICATO DA DNV GL
ISO 9001

AZIENDA CON SISTEMA DI GESTIONE AMBIENTALE CERTIFICATO DA DNV
ISO 14001

CLA & UTEK reserves the right to at any time the necessary changes to improve products without prior notice .

the Dealer

FLAT_2020_6_EN

C.L.A. S.r.l. Via Strada Artigianale Angelo Lapsus 310, 23036 San Giacomo di Teglio (So) Italy Tel.+39 0342 786116 | utek-air.it | cla-air.it